Earthquake®

POWERED CHORE EQUIPMENT

Operator's Manual

Original Operating Instructions

Chainsaw

CS4518B

⚠ WARNING

BEFORE USING OUR PRODUCTS, READ THIS MANUAL CAREFULLY TO UNDERSTAND THE PROPER USE OF YOUR UNIT.

Get parts online at ***www.getearthquake.com***

P/N: 14248

ECN: 10827

REV5: 06/01/2015

© 2015 Ardisam, Inc.

All Rights Reserved

INTRODUCTION

Thank You....

for purchasing a chainsaw from Earthquake. We have worked to ensure that this chainsaw meets high standards for usability and durability. With proper care, your chainsaw will provide many years of service. Take the time to read this manual carefully to learn how to correctly operate and maintain your chainsaw. This manual should be considered a permanent part of your chainsaw. Due to continuous effort to perfect our product, certain procedures and specifications are subject to change without notice.

CONTENTS

Registration 2
Warnings and Safety Precautions 3-11
Features 12
Specifications 13
Assembly 14
Operation 15-16
Maintenance and Storage 17-20
Troubleshooting and Repair 20-21
Parts Breakdown 22-26
Declaration of Conformity 27
Warranty 29-31

Record the model number and serial number in the space provided for easy reference. **SEE FIGURE 1.** Warranty is valid only if the completed registration is received by Ardisam within 30 days of purchase. You can register your warranty online by visiting www.getearthquake.com. If you do not have a computer, call our customer service department at (800) 345-6007 Mondays through Fridays from 8 a.m. to 5 p.m. CST.

Registration, Service And Maintenance Log

OWNERSHIP RECORDS		
Owner's Name:		
Owner's Address:		
City:	State/Province:	Zip/Postal Code:
Model Number:	Serial Number:	
Date of Purchase:		
Notes:		

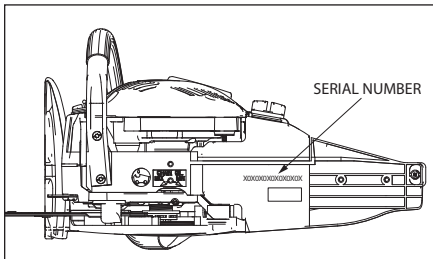

FIGURE 1

Federal Emission Information

Earthquake warrants to the retail purchaser, that this small, off-road engine was designed, built and equipped to conform at the time of initial sale to all applicable regulations of the U.S. Environmental Protection Agency (EPA). All weights, specifications, and features are approximate and are subject to change without notice. Due to continuous product improvements, product image may not be exact items.

This manual may contain information for several models. Read and keep this manual for future reference. This manual contains important information on SAFETY, ASSEMBLY, OPERATION, AND MAINTENANCE. The owner must be certain that all the product information is included with the unit. This information includes the MANUAL, the REPLACEMENT PARTS and the WARRANTIES. This information must be included to make sure state laws and other laws are followed. This manual should remain with the engine even if it is resold.

WARNINGS AND SAFETY PRECAUTIONS

Operator's Responsibility

Accurate assembly and safe and effective use of the machine is the operator's responsibility.

- Read and follow all safety instructions.
- Carefully follow all assembly instructions.
- Maintain the machine according to directions and schedule included in this operator's manual.
- Ensure that anyone who uses the machine is familiar with all controls and safety precautions.

Special Safety Messages

Your manual contains special messages to bring attention to potential safety concerns, machine damage as well as helpful operating and servicing information. Read all the information carefully to avoid injury and machine damage.

NOTE: General information is given throughout the manual that may help the operator in the operation or service of the machine.

This symbol points out important safety instructions which if not followed could endanger your personal safety.

Before Operating Engine:

WARNING

READ ENTIRE OPERATING AND MAINTENANCE INSTRUCTIONS FOR THIS PRODUCT. FAILURE TO FOLLOW INSTRUCTIONS COULD RESULT IN SERIOUS INJURY OR DEATH. OPERATE THE ENGINE ACCORDING TO THE SAFETY INSTRUCTIONS OUTLINED HERE AND INSERTED THROUGHOUT THE TEXT. ANYONE WHO USES THIS PRODUCT MUST READ THE INSTRUCTIONS AND BE FAMILIAR WITH THE CONTROLS.

WARNING

WARNING INDICATES A HAZARD WHICH, IF NOT AVOIDED, COULD RESULT IN DEATH OR SERIOUS INJURY TO PERSONNEL AND/OR PROPERTY DAMAGE.

CAUTION

CAUTION INDICATES YOUR EQUIPMENT CAN BE DAMAGED IF THE SAFETY INSTRUCTIONS THAT FOLLOW THIS SIGNAL WORD ARE NOT OBEYED.

IMPORTANT

INDICATES HELPFUL INFORMATION FOR PROPER ASSEMBLY, OPERATION, OR MAINTENANCE OF YOUR EQUIPMENT.

WARNING

CALIFORNIA PROPOSITION 65 WARNING

ENGINE EXHAUST FROM THIS PRODUCT CONTAINS CHEMICALS KNOWN TO THE STATE OF CALIFORNIA TO CAUSE CANCER, BIRTH DEFECTS, OR OTHER REPRODUCTIVE HARM.

WARNING

YOU MUST READ, UNDERSTAND AND COMPLY WITH ALL SAFETY AND OPERATING INSTRUCTIONS IN THIS MANUAL BEFORE ATTEMPTING TO SETUP AND OPERATE YOUR MACHINE.

FAILURE TO COMPLY WITH ALL SAFETY AND OPERATING INSTRUCTIONS CAN RESULT IN LOSS OF MACHINE CONTROL, SERIOUS PERSONAL INJURY TO YOU AND/OR BYSTANDERS, AND RISK OF EQUIPMENT AND PROPERTY DAMAGE. THE TRIANGLE IN THE TEXT SIGNIFIES IMPORTANT CAUTIONS OR WARNINGS WHICH MUST BE FOLLOWED.

Intended Use / Foreseeable Misuse

This machine is a saw that utilizes a toothed, rotating chain powered by an IC engine to be used in the cutting of cord-wood. This product shall not be used for any other purpose.

General Safety Rules

- Read, understand, and follow all instructions on the machine and in the manual(s). Be thoroughly familiar with the controls and the proper use of the machine before starting.
- Use this equipment for its intended purpose only.
- Familiarize yourself with all of the safety and operating decals on this equipment and on any of its attachments or accessories.
- Do not put hands or feet near or under rotating parts.
- Only allow responsible individuals who are familiar with the instructions to operate the machine. Do not allow children to operate this machine. Do not allow adults to operate the machine without proper instruction.
- Thoroughly inspect the area where the machine is to be used and remove all foreign objects. Your equipment can propel small objects at high speed causing personal injury or property damage. Stay away from breakable objects, such as house windows, automobiles, greenhouses, etc.
- When operating the machine, wear appropriate clothing such as a long-sleeved shirt or jacket. Also wear long trousers or slacks with chainsaw chaps designed to protect against the hazards of chainsaw operation. Do not wear shorts. Never wear sandals, sneakers, or open shoes, and never operate the machine with bare feet.
- Do not wear loose clothing or jewelry. They can get caught in moving parts. Always keep hands, feet, hair and loose clothing away from any moving parts on engine and machine.
- Always wear a full face shield and safety goggles or safety glasses with side shields when operating the machine to protect your face and eyes from foreign objects which can be thrown from the unit. Always wear a protective hearing device.
- Always wear work gloves and sturdy steel toe footwear. Wear footwear that will improve footing on slippery surfaces. Leather work shoes or short boots work well for most people. These will protect the operator's ankles and shins from small sticks, splinters, and other debris.
- It is advisable to wear protective headgear to prevent the possibility of being struck by small flying particles, or being struck by low hanging branches, twigs, or other objects which may be unnoticed by the operator.
- Do not operate the machine without proper guards or other safety protective devices in place.
- See manufacturer's instructions for proper operation and installation of accessories. Only use accessories approved by the manufacturer.
- Operate only in daylight or good artificial light.
- Do not operate product when fatigued or under the influence of alcohol, drugs or other medication which can cause drowsiness or affect your ability to operate this machine safely.
- Never operate machine in wet grass. Always be sure of your footing; keep a firm hold on the handle and walk; never run.
- Watch for traffic whenever you are operating near, or when crossing roads.
- If the equipment should start to vibrate abnormally, stop the engine (motor), disconnect the spark plug wire and prevent it from touching the spark plug. Check immediately for cause. Vibration is generally a warning of trouble. If the noise or vibrations of the machine increase, stop immediately and perform an inspection.
- Never leave the machine unattended when the engine is running. Remove the wire from the spark plug.
- Regularly inspect the machine. Make sure parts are not bent, damaged or loose. Keep all screws, nuts and bolts tight.
- Temperature of muffler and nearby areas may exceed 150° F (65° C). Allow muffler and engine areas to cool before touching.
- Do not transport the machine from one place to another with the engine running.
- Prolonged exposure to noise and vibration from gasoline engine-powered equipment should be avoided. Take intermittent breaks and/or wear ear protection from engine noise as well as heavy work gloves to reduce vibration in the hands.
- When moving the packaged machine, always do so with a partner.
- Check local regulations for age restrictions on use of this machine.

Product-Specific Safety Rules

- After striking a foreign object, stop the engine. Remove the wire from the spark plug. Inspect the chainsaw for damage. If damaged, repair before starting and operating the chainsaw.
- The cutting chain of the chainsaw should not rotate when the engine is idling. If it does rotate when engine is idling, contact Earthquake for instructions.

- If an object becomes lodged in the saw, turn engine off, remove the wire from the spark plug and secure, allow to cool before attempting to remove the foreign object.
- The clutch will transfer maximum power after about two hours of normal operation. During this break-in period clutch slippage may occur. The clutch should be kept free of oil or other moisture for efficient operation.
- Never cut in high wind, bad weather, when visibility is poor, or in very low temperatures. Always check the tree for dead branches that could fall during the felling operation.
- Never start cutting until you have a clear work area, secure footing and a planned retreat path away from the falling tree.
- Always hold the chainsaw firmly with both hands when the engine is running. Use a firm grip with thumb and fingers encircling the chainsaw handles.
- When carrying from one place to another, always stop the engine and hold the saw with the guide bar and saw chain behind you and the muffler away from your body.
- Always inspect the chainsaw for worn, loose, or damaged parts. Never operate a chainsaw that has been damaged, improperly adjusted, or is not completely and securely assembled.
- Use extreme caution when cutting small brush and saplings. Thinner material may be caught by the chain and could whip back toward you or pull you off balance.
- When cutting limbs under tension, stay alert for "spring back" so you are not struck when the tension in the wood fibers is released.
- Always shut off the engine before setting the chainsaw down.
- Keep the handles dry, clean, and free of lubricants, oils and fuel.

Kickback

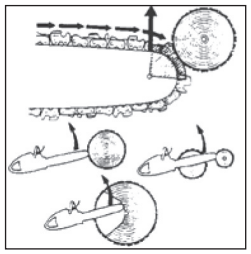

Kickback may occur when the guide bar nose or tip comes into contact with a foreign object, or when the "saw kerf" (gap in the wood being cut) closes in on the bar and pinches the saw chain.

Tip contact in some cases may cause a lightning-fast reverse action, kicking the guide bar up and back toward the operator.

Pinching the saw chain along the top of the guide bar may push the guide bar and the saw unit backward toward the operator.

Either of these reactions may cause the operator to lose control of the chainsaw, which could result in serious personal injury or death.

Do not rely exclusively on the safety devises built into your saw. As a chainsaw user, it is your responsibility to understand the inherent dangers of chainsaw use and the precautions necessary to minimize those dangers.

Precautions to Avoid Kickback:

- Always grip the chainsaw firmly with both hands; the right hand on the rear handle, and the left hand on the forward grip.
- Make certain the area in which you are cutting is free from obstructions. Do not let the guide bar nose come into contact with a log, branch, rock or other objects while cutting. Such contact could result in a kickback.
- Always make cuts at high engine speeds.
- Do not over-reach or cut above shoulder height.
- Always maintain a sharp and clean saw chain. Follow manufacturer's sharpening and maintenance instructions for the saw chain.
- Only use replacement bars and chains specified by the manufacturer or an appropriate equivalent.

Sawing

- This saw is provided for the sole intended purpose of cutting wood. Do not cut other materials with this saw.
- Do not attach other tools or accessories to the output shaft of the power unit. Doing so will void the manufacturer's warranty.
- Do not apply excessive pressure to force the saw through the cut. Run the engine at full throttle and apply only light pressure.
- Always maintain a firm footing.
- Never cut from a stepladder or while in a tree.

- Never use the guide bar as a means to lift, pry, move or split objects.
- Never mount the chainsaw on a fixed stand.
- If the guide bar and saw chain become pinched in a cut, do not race the engine or pull the saw out of the cut by force. Use a wedge or lever to open the cut and pull the saw free.

Felling a Tree

- Felling refers to the process of cutting down a standing tree. Numerous factors must be taken into consideration when felling a tree. First consider the environmental factors which will determine the felling direction:
- Wind is a major determining factor of felling direction.
- Location and number of heavy branches and the lean of the tree.
- Ease of bucking and clean-up after felling
- Nearby standing timber in which the felled tree could hang up.
- Location of power, telephone and data utilities, buildings, roads, bodies of water, property lines, etc.
- Wood structure and condition (i.e. rotten heartwood or core).
- Keep all bystanders at least 2-1/2 tree lengths away from the base of the tree to be cut. This area is considered a danger zone and must be avoided before and during the felling operation.

Retreat Path

- Plan two (2) retreat paths away from the felling direction of the tree. Do not retreat in the opposite direction from the falling tree. Instead, retreat at a 45-degree angle to either side.
- Clear the retreat paths of all obstacles.
- Place all excess tools and equipment a safe distance from the tree, but not in the retreat paths.

Felling Notch

The felling notch (1) is the first cut when felling a tree. **SEE FIGURE 2.** The notch will act as a hinge and will direct the tree to fall in the desired direction.

1. Begin the felling notch (1) by lining up the guide bar perpendicular to the desired felling direction.
2. Make a downward cut at 45-degress to a depth of about 1/5 to 1/4 of the overall diameter of the tree.
3. Finish the notch by making a horizontal cut perpendicular to the desired felling direction.
4. Remove the resultant piece.

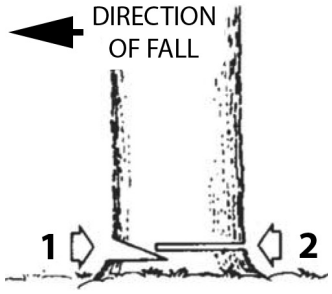

FIGURE 2

Felling Cut

Alert others in the area of imminent danger of the falling tree. Double check that no one has entered the area in the felling direction. **SEE FIGURE 2.**

1. Begin the felling cut (2) by making a horizontal cut perpendicular to the intended felling direction and approximately 1-2 inches above the bottom of the felling notch.
2. Leave approximately 1/10 of the tree's diameter uncut. This will form the hinge.
3. Drive plastic or wooden wedges into the felling cut to control the fall.
4. As the tree begins to fall, alert others and immediately evacuate the area around the tree.

Limbing a Felled Tree

"Limbing" refers to removing the limbs from a fallen tree. There is an extremely high danger of kickback during the limbing operation. Do not work with the nose of the guide bar, as this could cause a kickback. Use extreme caution and avoid contact between the nose of the bar and the log or other limbs. Do not stand on the log while limbing it as the log may roll as limbs are removed and the center of gravity shifts.

Start limbing by removing limbs from the top side of the log, leaving limbs on the bottom to support the log up off the ground. Limbs under tension may pinch the guide bar and saw chain. Shut off the engine and lift the limb to remove the bar safely.

Bucking a Log

"Bucking" is the cross-cut operation of cutting a log into usable sections. Do not stand on the log while bucking as it may roll. When bucking on a slope, stand uphill of the log in case it begins to roll unexpectedly. Cut only one log at a time.

- When bucking small logs, place them in a "V" shaped bucking horse to keep them at a working level. Never allow a bystander to hold the log. Never hold the log with your leg or foot.

⚠ WARNING

BE CAREFUL WHEN CUTTING TREES WITH ROTTEN HEARTWOOD (THE CORE OF THE TREE). THERE IS AN INCREASED RISK THAT THE TREE COULD SNAP OR SPLIT UNEXPECTEDLY DURING THE CUT. CHECK FOR DEAD OR ROTTEN LIMBS BEFORE BEGINNING THE CUT. DEAD LIMBS CAN VIBRATE LOOSE FROM THE TREE AND FALL, STRIKING THE OPERATOR.

⚠ CAUTION

LOGS AND LIMBS UNDER TENSION CAN SPRING BACK WHEN CUT LOOSE. THIS LIGHTNING FAST ACTION COULD CAUSE A LOSS OF CONTROL OF THE CHAINSAW.
ONLY TRAINED AND EXPERIENCED PROFESSIONALS SHOULD FELL TREES NEAR OVERHEAD LINES AND BUILDINGS. A SLIGHT MISJUDGMENT OF WIND DIRECTION OR NATURAL LEAN OF A TREE COULD RESULT IN MAJOR PROPERTY DAMAGE.
DO NOT CUT THROUGH THE HINGE. CUTTING THROUGH THE HINGE INCREASES THE RISK OF LOSING CONTROL OF THE FELLING DIRECTION.

- To buck a log on flat ground, make perpendicular cuts through about half of the diameter of the log. Roll the log and finish the cuts from the other side.
- To buck a pillowed or supported log, always make a relieving cut through about 1/3 the diameter of the log from the compressed side. Finish with a bucking cut from the tension side of the log.

TIP: ***When cutting firewood, make sure you know the optimum length of the finished firewood ahead of time. Use the guide bar as an approximate length gauge.***

Pruning

Pruning is removing limbs from a standing tree, often for purposes of maintaining a tree's health or aesthetics. Always work with a firm footing. Never cut from a stepladder. **Do not over reach. Do not cut above shoulder height.**

1. Begin pruning by making a relief cut about 3 inches away from the trunk of the tree to a depth of about 1/3 the diameter of the branch.
2. Complete the cut from above, just inside of the initial relief cut.
3. Finish pruning by making a smooth even cut nearly flush to the trunk. It is recommended to only prune trees while they are dormant in the fall and winter to reduce the risk posed by disease or insects.

⚠ WARNING

ENGINES GIVE OFF CARBON MONOXIDE, AN ODORLESS, COLORLESS, POISONOUS GAS. CARBON MONOXIDE MAY BE PRESENT EVEN IF YOU DO NOT SMELL OR SEE ANY ENGINE EXHAUST. BREATHING CARBON MONOXIDE CAN CAUSE NAUSEA, FAINTING OR DEATH, IN ADDITION TO DROWSINESS, DIZZINESS AND CONFUSION.
IF YOU EXPERIENCE ANY OF THESE SYMPTOMS, SEEK FRESH AIR AND MEDICAL ATTENTION IMMEDIATELY.
ENGINE FUEL CAN BE FLAMABLE AND EXPLOSIVE.

ENGINE SAFETY PRECAUTIONS

If your product comes with a separate engine manual, be sure to read and follow all safety and warning precautions outlined there, in addition to any in this manual.

Preventing Carbon Monoxide Poisoning

- Always start and run engine outdoors. Do not start or run engine in an enclosed area, even if doors or windows are open.
- Never try to ventilate engine exhaust indoors. Carbon monoxide can reach dangerous levels very quickly.
- Never run engine outdoors where exhaust fumes may be pulled into a building.
- Never run engine outdoors in a poorly ventilated area where the exhaust fumes may be trapped and not easily taken away. (Examples include: in a large hole or areas where hills surround your working area.)
- Never run engine in an enclosed or partially enclosed area. (Examples include: buildings that are enclosed on one or more sides, under tents, car ports or basements.)
- Always run the engine with the exhaust and muffler pointed in the direction away from the operator.
- Never point the exhaust muffler towards anyone. People should always be a safe distance away from the operation of the engine and its attachments.
- Do not change the engine governor settings or overspeed the engine.

Gasoline Fires and Handling Fuel Safely

- When storing extra fuel be sure that it is in an appropriate container and away from any fire hazards.
- Prevent fire and explosion caused by static electric discharge. Use only nonmetal, portable fuel

⚠ CAUTION

HOT GASES ARE A NORMAL BY-PRODUCT OF A FUNCTIONING CATALYTIC CONVERTER. FOLLOW ALL SAFETY INSTRUCTIONS TO PREVENT BURNS AND FIRES.

DO NOT ALTER/MODIFY ENGINE:

NEVER ALTER OR MODIFY THE ENGINE FROM THE FACTORY. SERIOUS INJURY OR DEATH MAY OCCUR IF ENGINE IS MODIFIED OR ALTERED.

WHEN WORKING ON OR REPLACING PARTS FOR THE ENGINE OR PRODUCT, YOU MUST ALWAYS DISCONNECT SPARK PLUG WIRE FROM THE SPARK PLUG AND KEEP IT AWAY FROM THE SPARK PLUG.

containers approved by the Underwriter's Laboratory (U.L.) or the American Society for Testing & Materials (ASTM).

- Always fill fuel tank outside in a well ventilated area. Never fill your fuel tank with fuel indoors. (Examples include: basement, garage, barn, shed, house, porch, etc.) Never fill tank near appliances with pilot lights, heaters, or other ignition sources.
- If the fuel must be drained, this should be done outdoors. The drained fuel should be stored in a container specifically designed for fuel storage or it should be disposed of properly.
- Never remove the fuel cap or add fuel with the engine running. Stop engine and allow to cool before filling.
- Do not smoke while handling fuel.
- Never drain fuel from engine in an enclosed area.
- Always wipe up excess (spilled) fuel from engine before starting. Clean up spilled fuel immediately. If fuel is spilled, do not start the engine but move product and fuel container from area. Clean up spilled fuel and allow to evaporate and dry after wiping and before starting.
- Allow fuel fumes/vapors to escape from the area before starting engine.
- Test the fuel cap for proper installation before starting and using engine.
- Always run the engine with fuel cap properly installed on the engine.
- Do not store engine with fuel in fuel tank indoors. Fuel and fuel vapors are highly explosive.
- Never pour fuel from engine fuel tank.
- Never siphon fuel by mouth to drain fuel tank.
- Always have an adult fill the fuel tank and never allow children to fill the engine.
- Never allow an adult or anyone under the influence of drugs or alcohol to fill engine.
- When storing gasoline or equipment with fuel in the tank, store away from furnaces, stoves, water heaters or other appliances that have a pilot light or other ignition source because they can ignite gasoline vapors.

Burns and Fires

The muffler, muffler guard and other parts of the engine become extremely hot during the operation of the engine. These parts remain extremely hot after the engine has stopped.

Prevention of Burns and Fires

- Never remove the muffler guard from the engine.
- Never touch the muffler guard because it is extremely hot and will cause severe burns.
- Never touch parts of the engine that become hot after operation.
- Always keep materials and debris away from muffler guard and other hot parts of the engine to avoid fires.
- This engine is designed to operate using a catalytic converter which contributes to the engine's compliance with the EPA.

Children and bystanders

Tragic accidents can occur if the operator is not alert to the presence of children and/or bystanders. Never assume that others will remain where you last saw them.

- Keep the area of operation clean of all persons, especially small children and pets. Keep children under the watchful care of a responsible adult.
- Be alert and turn machine off if children enter the area.
- Before and while moving backwards, look behind and down for small children.
- Never allow children to operate the machine.
- Use extra care when approaching blind corners, shrubs, trees, or other objects that may obscure vision.

Service

- Always stop the engine whenever you leave the equipment, before cleaning, repairing or inspecting the unit. Engine should be turned off and cool, spark plug wire must be removed from spark plug before any repairs or adjustments are attempted. Never make adjustments or repairs with the engine (motor) running. Disconnect the spark plug wire, and keep the wire away from the plug to prevent accidental starting. Remove the ignition key if equipped with an electric start.
- Always wear eye protection when you make adjustments or repairs.
- Keep all nuts and bolts tight and keep equipment in good condition.
- Never tamper with safety devices. Check their proper operation regularly.
- When servicing or repairing the machine, do not tip the machine over or up unless specifically instructed to do so in this manual. Service and repair procedures can be done with the machine in an upright position. Some procedures will be easier if the machine is lifted on a raised platform or working surface.
- To reduce fire hazard, keep machine free of grass, leaves, or other debris build-up. Clean up oil or fuel spillage. Allow machine to cool before storing.
- Stop and inspect the equipment if you strike an object. Repair, if necessary, before restarting.
- Do not change the engine governor setting or overspeed the engine.
- Clean and replace safety and instruction decals as necessary.
- To guard against engine over-heating, always have engine debris filter mounted and clean.
- Inspect machine before storage. When not in use, disconnect spark plug lead and store indoors in a dry place locked or otherwise inaccessible to children.
- Use only original equipment parts from Earthquake, including all nuts and bolts.

SAFETY DECALS

Reading this manual and the safety instructions it contains will provide you with the necessary basic knowledge to operate this equipment safely and effectively. Several safety labels are placed on the chainsaw to remind you of this important information when you operate the unit.

These important safety labels are illustrated below, and are shown here to help familiarize you with the location and content of the safety messages you will see as you perform normal cutting operations. Review these labels now. If you have any questions regarding their meaning or how to comply with these instructions, reread the complete safety instruction text on the preceding pages, or contact your local dealer.

Should any of the safety labels become unreadable because of being worn, faded, or otherwise damaged during the use of your chainsaw, use the part number information provided to order a replacement label from your local authorized dealer.

The safety labels are easily applied, and will act as a constant visual reminder to you, and others who may use the equipment. Follow the safety instructions necessary for safe, effective operation of your chainsaw.

(1) Read operator's instruction book before operating this machine.

(2) You must wear appropriate ear, eye, and head protection.

(3) Use two hands when operating the chainsaw.

(4) Warning! Danger of kickback.

(5) Read, understand and follow all warnings.

For safe operation and maintenance, additional symbols are engraved on the machine.

(6) Indicates the port for refueling the gas/oil mixture.

Location: Near the fuel cap.

(7) Indicates the port to refill the chain oil.

Location: Near the oil cap

(8) Indicates the engine operation ON/ OFF switch. Flipping the switch to the "O" position immediately stops the engine.

Location: Near the rear at the left side of the rear handle.

(9) Indicates the choke knob location. Pull out the choke knob and the choke closes; push in the choke knob and the choke opens. (Sets High Idle.)

Location: Near the rear at the right side of the rear handle.

(10) Indicates the oil pump adjustment location. Turn the rod using a screwdriver and follow the arrow to the MAX position to increase chain oil flow. Turning the rod to the MIN position decreases chain oil flow.

Location: Bottom of the power unit.

(11) Indicates the directions that the chain break is released (white arrow) and activated (black arrow)

Location: Front of the chain cover.

(12) Indicates the direction of the saw chain installation.

Location: Front of the chain cover.

CE MODEL SAFETY WARNINGS AND MARKINGS (FOR EUROPEAN MODELS)

The following markings and labels are applied to the product, in addition to those shown in the original instructions.

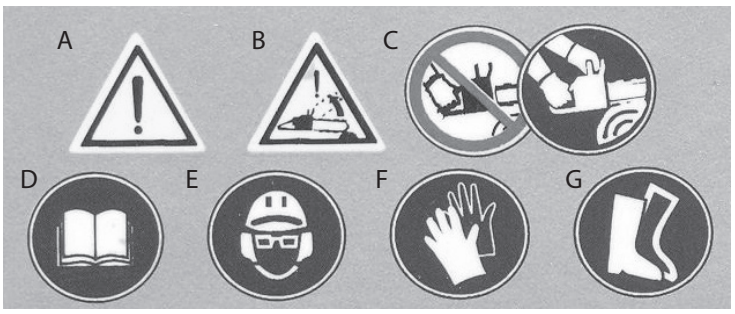

Decal Descriptions:

A: WARNING!

B: WARNING! Danger of kickback

C: Use two hands while operating chainsaw

D: Read operator instructions

E: Always wear protective head, eye, and ear gear

F: Always wear protective gloves when using product

G: Always wear protective foot gear when operating unit

H. Fuel Primer

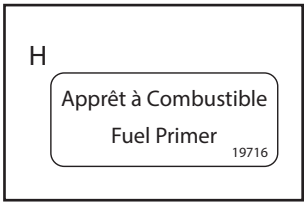

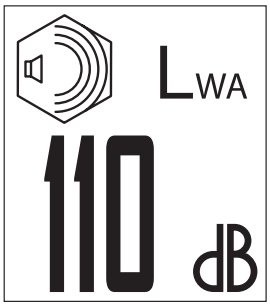

Decal Description:

Guaranteed noise level decal

NAMEPLATE DECAL

ARDISAM, INC.
1160 8th Avenue | Cumberland, WI 54829 | USA

Model: CS45 Type: Chain Saw
Year: Mass: 6.2 kg
Max. Operating Speed: 11,000 rpm
10805

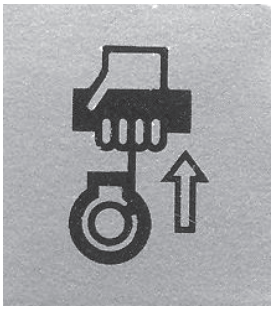

Decal Description:

Pull recoil out slightly before giving a full arm pull.

SAFETY FEATURES

This saw is equipped with certain safety features and devices to protect the user from harm in the event the saw reacts unexpectedly to external forces:

1. **Chain Brake:** The saw is equipped with a chain brake designed to stop the chain instantaneously upon activation. The chain brake can be activated in one of two ways:

- The forward hand guard doubles as an activation lever for the hand brake. It can be activated manually, or it may be activated by the user's arm if a kickback occurs.
- The saw is also equipped with an "Inertial Chain Break." The same mechanism as above is activated by the inertial force created when a counterweight under the forward hand guard accelerates toward the bar nose during a kickback.
- Proper cleaning and care of the chain brake system are required to ensure reliable operation in the field. You should also check your chain brake for proper operation regularly. To check your chain brake:
- Manually activate the chain brake by pushing the forward hand guard toward the bar nose **(SEE FIGURE 3-A)**. There will be an audible click when the chain brake engages. If there is no audible click, the chain brake may already be engaged. Pull back on the forward hand guard to deactivate the brake **(SEE FIGURE 3-B)**. An audible click should be heard when the brake disengages. If there is still no audible click, the brake is not functioning properly. Remove the clutch cover, clean and reassemble, and re-test. If no audible click is heard, contact customer service for further assistance.
- With the saw's engine shut off and the chain brake disengaged, firmly grasp both handles and hold the saw over a log or low stump. Swing the bar nose sharply down until it makes contact. This should create enough inertial force to automatically activate the chain brake. When the chain brake engages, an audible click should be heard. If no audible click is heard, the brake is not functioning properly. Remove the clutch cover, clean and reassemble, and re-test. If no audible click is heard, contact customer service for further assistance.

NOTE: Chain break must be in the OFF position to run the chainsaw.

2. **Throttle Interlock:** This saw is equipped with a throttle interlock designed to prevent accidental engagement of the throttle control. The throttle interlock is disengaged by depressing the red tab on top of the rear handle. This is usually accomplished when the user grasps the rear handle to operate the saw.
3. **Chain Catcher:** Each saw is equipped with a chain catcher beneath the clutch cover. If the chain is ever thrown from the guide bar, or if the chain breaks, the chain catcher is designed to capture the chain and prevent it from whipping back toward the operator.

NOTE: Inspect the chain catcher before each use. Replace if missing or badly damaged.

4. **Kickback Reduction Guide Bar and Saw Chain:** This saw has been equipped with a *Double Guard® 91 guide bar and 91P S-Series Low Kickback saw chain by Oregon®*. The features of this bar and chain combination are design to reduce the risk of kickback. To maintain adequate kickback prevention, only use these components when replacing guide bar or saw chain. (Refer to the Maintenance section of this manual for full details.)

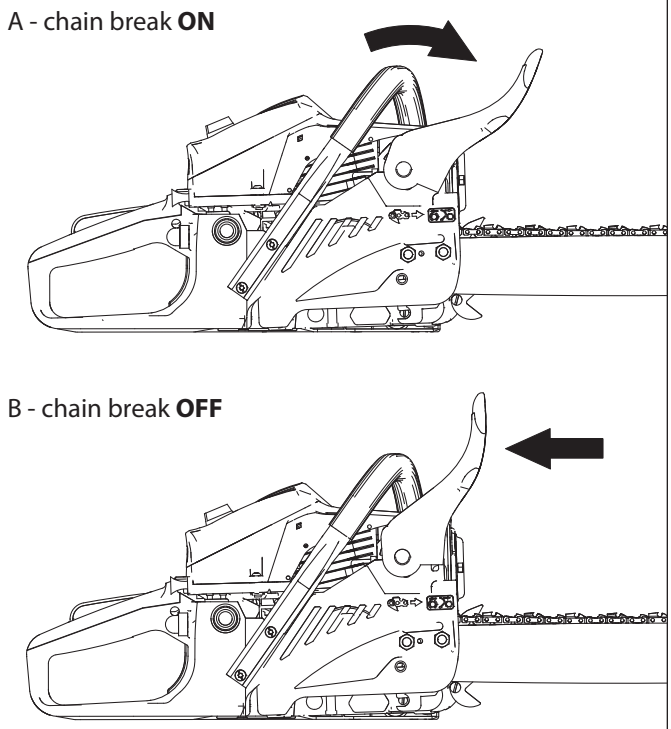

FIGURE 3

FEATURES

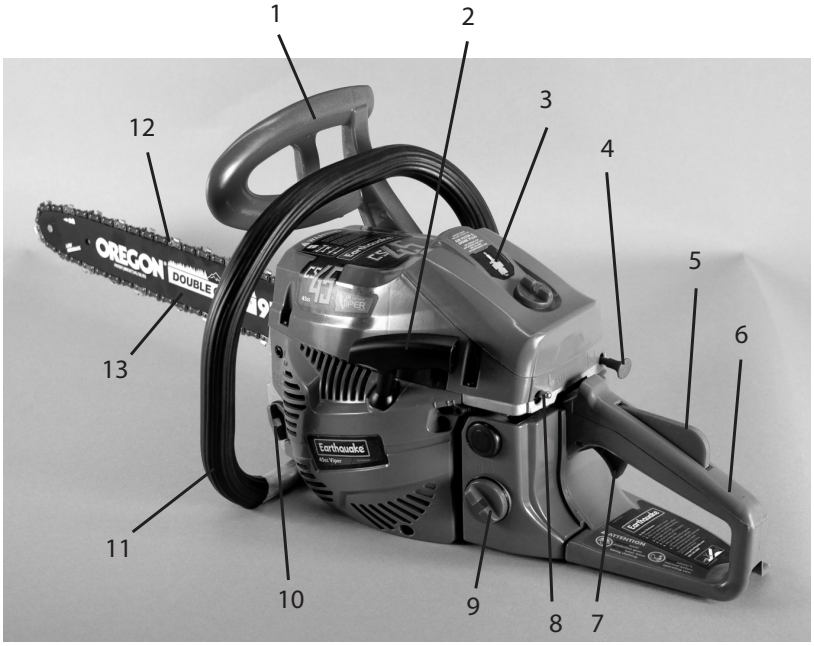

1. Front Hand Guard and Chain Brake Cover
2. Starter Handle
3. Air Filter Cover
4. Choke Knob
5. Throttle Trigger Lock-Out
6. Rear Handle
7. Throttle Trigger
8. Engine Switch
9. Fuel Tank Cap
10. Oil Tank Cap
11. Front Handle
12. Saw Chain
13. Guide Bar
14. Primer Bulb
15. Chain Tension Adjust (Not Shown)

SPECIFICATIONS

SPECIFICATIONS	
Displacement	45.02cc
Fuel mixture	Mixture (Unleaded Gasoline, 50:1 two-cycle oil)
Fuel type	Minimum 87 octane gasoline with NO ethanol content NOTE: If using an ethanol blended fuel, a fuel stabilizer, mixed to manufacturer specifications, is recommended
Engine Oil	Engines are lubricated by Viper Engine Oil Part No. 16890 specially formulated for air-cooled 2-cycle gasoline engine use. If oil is not available, use an antioxidant added quality oil expressly labeled for air-cooled 2-cycle chain saw engine use.
Fuel tank capacity	550 ml
Chain oil	Bar chain oil for proper season
Chain Oil tank capacity	260 ml
Carburetor	Diaphragm type
Fuel consumption at maximum engine power	560 g/kw·h
Idling speed	3000 rpm max / rpm +/- 200
Maximum speed with cutting attachment	11,500 r/min +/- 500
Ignition system	CDI with timing advance function
Spark Plug	L8RTF, RCJ7Y, or BPMR7A
Oil feeding system	Mechanical plunger pump with adjuster
Sprocket Teeth x Pitch	7T x .375"
Dimensions (L x W x H)	425 x 240 x 288 mm 16.75" x 9.5" x 9.35"
Dry weight (without guide bar and chain, empty tanks	12.78 lb
Guide Bar Type	Sprocket Nose
Guide Bar Size	18" Oregon® 180 SDEZ 095
Saw Chain Type	Oregon® 91VG or 91P S62
Pitch	3/8" Low Profile
Gauge	0.050"

Specifications are subject to change without notice.

This saw is intended primarily for the consumer or occasional user as defined in ANSI B175.1.

SOUND AND VIBRATION LEVELS

Model	2006/42/EC Operator Ear L_{PA} (dBA)	2006/42/EC Sound Power Level L_{WA} (dBA)	2006/42/EC Hand/Arm Vibration Max m/s^2
CS3814B	100	110	10.5
CS4116B	100	110	10.5
CS4518B	102	110	12.5

Sound levels tested in accordance with ISO3744 & ISO 11201 - Grade 2 (Engineering) Method. Readings taken with engine at full throttle.
EAV = Exposure Action Value, ELV = Exposure Limit Value

ASSEMBLY

The Earthquake chainsaw carton includes the following

- Power Unit: Pre-assembled engine, handles, fuel tank, oil tank, and chain brake handle.
- Guide Bar: *Oregon® Double Guard 18".*
- Saw Chain: *Oregon® 91VG or 91P S62*
- "Scwrench" Multi-tool: Combination plug/bar wrench and screwdriver
- Bar Scabbard: Plastic guard that fits over the guide bar and saw chain.
- 5/32 inch round chain file
- Bar and chain have been installed for your convenience.

Bar and Chain Removal and Assembly

1. Place the power unit on a flat, stable work surface with the muffler facing to your right.
2. Pull back (toward the forward handle) on the chain brake lever to ensure that the chain brake is disengaged.
3. Using the "Scwrench" multi-tool, loosen and remove the bar nuts securing the clutch cover to the power unit. Set the clutch cover aside. Tip: If working in the field, place the bar nuts in the clutch cover to keep from losing them in grass or foliage.
4. Install the guide bar on the bar studs, and slide the bar back until it comes into contact with the drive sprocket.
5. Protective gloves should be used when handling the chain. Carefully remove the saw chain from its package. Stretch the chain out into a long horizontal loop. **The cutting teeth on the top length of chain should face away from the power unit.** The cutting teeth on the bottom length of the chain should face toward the power unit.
6. Wrap the chain around the drive sprocket first, and lay the drive links of the chain into the groove along the outer perimeter of the guide bar. Lay the chain over the nose (tip) of the guide bar.
7. Slide the bar forward until the bar mates with the tensioning tab. Make sure that the drive links of the chain are seated within the groove around the perimeter of the bar. If the bar will not slide forward far enough, use the screwdriver end of the Scwrench to turn the tension screw counter-clockwise. The tension screw is located on the front of the power unit, next to the guide bar.

⚠ WARNING

FAILURE TO PROPERLY TENSION THE CHAIN COULD RESULT IN DAMAGE TO THE UNIT OR SEVERE INJURY OR DEATH. OVER TENSIONING COULD CAUSE DAMAGE TO THE SAW'S POWER UNIT OR GUIDE BAR. LACK OF TENSION COULD CAUSE THE CHAIN TO DISENGAGE THE BAR COMPLETELY, ALLOWING IT TO WHIP BACK WHERE IT COULD CONTACT THE OPERATOR CAUSING SEVERE INJURY OR DEATH.

NOTE: Make sure the chain brake is OFF.

8. Replace the clutch cover over the bar, and turn the bar nuts onto the bar studs. Only finger tighten the bar nuts at this step.
9. Locate the tension screw on the front of the power unit next to the guide bar. Use the Scwrench to turn the tension screw clockwise. This will take the slack out of the saw chain. When properly tensioned, two conditions must be met:

- The chain should not hang or droop away from the guide bar.
- You should be able to pull the chain slightly away from the guide bar, but not so far as to be able to disengage the drive links from the groove around the perimeter of the bar.

10. Pull up on the guide bar's nose and use the Scwrench to tighten the bar nuts. Check that the chain spins freely around the bar by hand. If there is resistance, the chain may be too tight.
11. Place the bar scabbard over the guide bar and saw chain. This guard will help to protect the user from the sharp cutting teeth as well as help keep the cutting teeth sharp when the saw is not in use.
12. Check the tension of the saw chain frequently during use, especially during the first two hours of use on a new chain. Re-tension as needed.
13. Always release the tension in the chain after finishing work and before the saw chain and guide bar cool completely. As the saw chain heats up during operation, it will expand and stretch, requiring re-tensioning on occasion. As the saw cools down the saw chain will shrink, and if left tensioned, could cause severe and permanent damage to the guide bar or the power unit's drive components.

OPERATION

Filling Fuel Tank

1. Shut off engine and allow engine to completely cool before refilling the fuel tank.
2. Move to a well-ventilated area, outdoors, away from flames and sparks.
3. Clean debris from area around the fuel cap.
4. Loosen fuel cap slowly.
5. Carefully add fuel without spilling.

Note: Use a minimum 87 octane gasoline with NO ethanol content (50:1 mixture). If using an ethanol blended fuel, a fuel stabilizer, mixed to manufacturer specifications, is recommended.

6. Do not fill gas tank completely full; allow space for fuel to expand.
7. Immediately replace fuel cap and tighten. Wipe off spilled fuel and allow to dry before starting engine.

The saw chain needs to stay lubricated during operation of the unit. Aside from the fuel reservoir on the chainsaw, there is also a bar and chain oil reservoir. Use only oil that has been designed specifically for use with chainsaws. Bar and chain oil has chemical properties which allow it to adhere to the saw chain and provide better lubrication while the chain is in motion.

The saw is equipped with an adjustable automatic oiler. The oiler and oil reservoir are designed such that a full tank of fuel will run out before a full tank of oil. This ensures that the bar and chain will receive a constant flow of oil during operation. Always top off your oil reservoir when re-fueling.

To adjust the automatic oiler you must first locate the oiler screw positioned on the under-side of the chainsaw **(SEE FIGURE 4)**. Turn the screw counter-clockwise to increase and clockwise to decrease oil flow.

NOTE: It is recommended for the use of your chainsaw to leave the automatic oiler on full flow.

Filling the bar and chain oil reservoir

1. While the engine is cool for re-fueling, clean debris from area around the bar and chain oil cap.
2. Loosen oil cap slowly.
3. Carefully add bar and chain oil without spilling.
4. Do not fill oil reservoir completely full; allow space for oil to expand.
5. Replace cap and tighten. Wipe off any spilled oil before starting engine.

NOTE: Do not use waste or recycled oil. Waste or recycled oil could contain contaminants which will cause damage to the oil pump.

WARNING

CHAIN BRAKE WILL NOT PREVENT A KICKBACK. IN THE EVENT OF A KICKBACK, THE CHAIN BRAKE IS DESIGNED TO REDUCE THE RISK OF INJURY TO THE OPERATOR.

DO NOT MODIFY OR ALTER THE FUNCTIONALITY OF THE THROTTLE INTERLOCK IN ANY WAY. DOING SO WILL ALLOW ACCIDENTAL ENGAGEMENT OF THE THROTTLE WHICH WILL RESULT AN UNEXPECTED OPERATION OF THE SAW CHAIN.

CHAIN CATCHER IS INTENDED TO PREVENT INJURY IN THE EVENT OF A CHAIN MALFUNCTION. NEVER OPERATE A SAW WITHOUT A CHAIN CATCHER. REPLACE IF MISSING OR BADLY DAMAGED.

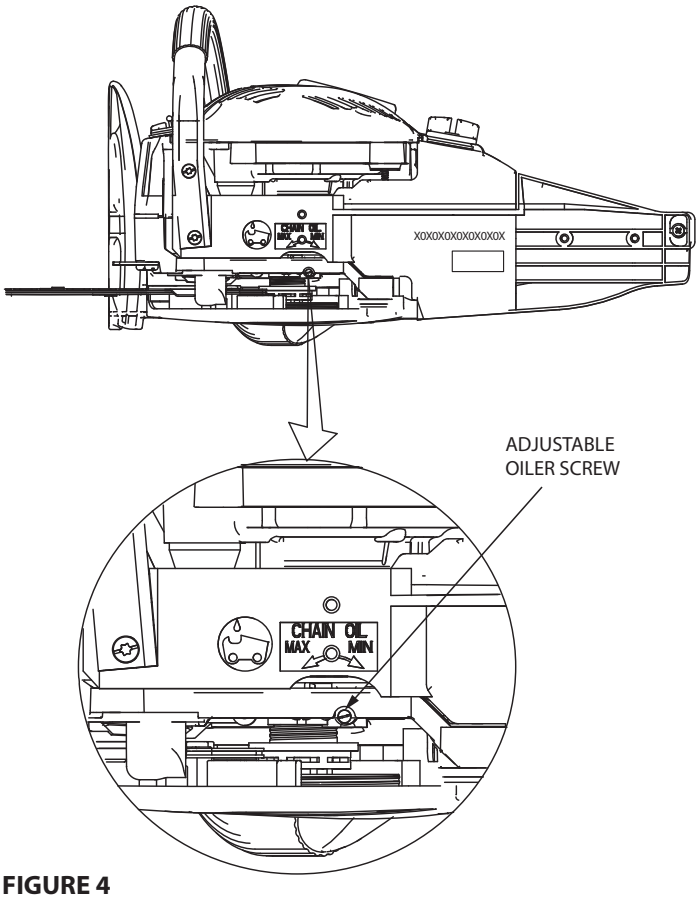

FIGURE 4

PRE-START INSPECTION

1. Check that all safety guards are in place and all nuts and bolts are secure.
2. Inspect air cleaner for cleanliness.
3. Check the fuel supply. Fill the fuel tank no closer than 0.5" from top of tank to provide space for expansion.
4. Check the bar and chain oil level.
5. Be sure spark plug wire is attached and spark plug is tightened securely.
6. Examine underneath and around engine for signs of oil or fuel leaks.
7. Inspect fuel hoses for tightness and fuel seepage.
8. Look for signs of engine damage.
9. Remove excessive debris from muffler area and recoil starter.

START-UP

Before starting the engine, inspect the immediate area. Check that there are no bystanders nearby. Make sure that you have a firm and stable footing and remove tripping hazards. Clear all objects that the saw chain could catch on and cause a pull-in, push-back, or kickback reaction.

There are two safe and approved positions for cold-starting.

Starting on the ground:

1. Place saw on a flat, stable patch of ground free of vegetation and check that the saw chain is not in contact with the ground.
2. Place right foot on the base of the rear handle and firmly grip the forward handle with left hand.

Starting In A Raised, Standing Position:

1. Place the rear handle between knees or thighs and firmly grip the forward handle with left hand.

Cold Engine Start Procedure:

1. Set the chain brake to the ON position by pulling the front hand guard away from the front handle.

NOTE: See the Safety Features section for more instruction on how to engage and disengage the chain brake.

2. Grip the rear handle with right hand, depressing the throttle interlock with right palm, and pull the throttle control to check for smooth operation.
3. Push the primer bulb until it fills with fuel (3-4 pushes).

⚠ WARNING

DO NOT RUN A SAW THAT IS NOT PROVIDING PROPER OIL COVERAGE UNDER ANY CIRCUMSTANCES. DOING SO WILL RESULT IN PERMANENT DAMAGE TO THE GUIDE BAR AND SAW CHAIN.

4. Put the power unit's ignition switch in the ON position.

NOTE: The ON position is when the toggle switch is up.

5. Pull the choke all the way out to the CHOKE position.

NOTE: This will close the choke and set throttle to high idle.

6. Pull starter rope 1-4 times. **DO NOT** pull more than 4 times. After pull 4, push the choke in without touching throttle (this maintains the throttle in high idle). Pull starter rope an additional 1-4 times with the choke pushed all the way in. The engine should start. If engine does not start, continue with Step 5 of Cold Engine Start. Failure to follow these starting instructions may cause your engine to flood.

NOTE: Proper starting form begins with grasping the starter handle firmly with right hand and slowly pull until it provides resistance. Without letting the starter handle retract, pull rope with a rapid full arm stroke. Let it return to its original position very slowly until unit fires or starts. Repeat this technique ever time the starter rope is pulled.

7. After engine starts running, depress throttle interlock with right palm and pull throttle control with right index finger.

NOTE: This will automatically reset the choke to the RUN position and disengage high idle and go to normal idle.

8. Release the chain brake. To set the chain brake to the OFF position, push the front hand guard towards the front handle.

Warm engine Start Procedure:

1. Put ignition switch in the ON position.
2. Pull the choke all the way out.
3. Push choke all the way back in without touching throttle (this sets throttle to high idle).
4. Pull starter rope 1-4 times, engine should start. If engine does not start, continue with Step 5 of the Cold Engine Start.

Hot Engine Start Procedure:

1. Put ignition switch in the ON position.
2. Pull rope 1-2 times to start.
3. If engine does not fire, refer to Warm Engine Start.

Stopping The Engine:

1. Let the saw idle for up to one minute to continue blowing air through the engine to aid the cool-down process. Doing so will help prolong the life of the saw.

NOTE: The engine is still running. Always maintain a firm, controlling grip on the unit while the engine is running.

2. Put the unit's ignition switch in the OFF position.
3. Once cooled down and off, remove tension from the chain.

MAINTENANCE AND STORAGE

Good maintenance is essential for safe, economical, and trouble-free operation. It will also help reduce air pollution. To help you properly care for your engine, the following pages include simple maintenance procedures using basic hand tools. Other service tasks that are more difficult, or require special tools, are best handled by professionals and are normally performed by a technician or other qualified mechanic.

NOTE: Maintenance, replacement or repair of the emissions control devices and systems may be performed by any non-road engine repair establishment or individuals. However, items must be serviced by an authorized dealer to obtain "no charge" emissions control service.

The maintenance schedule applies to normal operating conditions. If you operate your engine under unusual conditions (such as sustained high-load or high-temperature operation) or use it in unusually wet or dusty conditions, consult your servicing dealer for recommendations applicable to your individual needs and use.

Maintenance Item		Every Refueling	Every 8 Hours	Every 20 Hours	Each Year
Check Engine and Check Hardware		X	X		
Air FilTer (See Air Filter Section)	Check		X		
	Clean		X	X	
	Replace			X	X
Spark Plug (Gap 0.025" or 0,0635mm) See Spark Plug Section	Check/Adjust			X	
	Replace				X
Chain Tension	Check/Adjust	X			
Chain (See Chain Sharpening Section)	Check/Sharpen	X			
	Clean	X			
	Replace				X
Guide Bar (See Check Guide Bar Section)	Check	X			
	Clean		X		
Oiler Port	Clean		X		
Drive Sprocket (See Drive Sprocket Section)	Check/Clean	X	X		
	Grease		X		X

BAR AND CHAIN OIL

The saw is equipped with an adjustable chain oiler. The oil pump, driven by the drive sprocket, will only pump oil when the engine is running at high enough speeds to engage the clutch and rotate the chain. Furthermore, the flow of oil is adjustable to accommodate variations in chain oil due to temperature.

To adjust the oil pump, insert a screwdriver in the small notch beneath the clutch and drive sprocket. To increase the flow of oil, turn the screwdriver counter-clockwise. To decrease the flow of oil, turn the screwdriver clockwise. For optimum performance, use a higher rate of flow with thicker oil or in colder temperatures, and a lower rate of flow with thinner oil or in warmer temperatures.

The guide bar and saw chain need to be well lubricated during operation to prevent permanent damage from friction and heat. Be sure to check the oil supply to the bar and chain before use.

1. After starting the engine, hold the saw up with the chain suspended in front of or above a test surface.
2. Run the engine at about half throttle.
3. Oil should be flung off of the rotating chain onto the test surface.

If the saw chain seems dry, but there is some oil present on the bar or test surface, the oil pump may be set too low. Increase the setting by turning the adjustment screw, located on the under-side of the saw, counter-clockwise **(SEE FIGURE 4)**. If the saw chain and guide bar are dry and there is no oil on the test surface, the oiler port and guide bar may need cleaning. Remove the clutch cover, bar, and chain, and clean under the clutch cover with a brush and clean the guide bar with a wire or small screwdriver.

Reassemble and retest for oil presence. If no oil is present after adjusting the oiler setting and cleaning the oiler port, the oil pump may not be functioning. Discontinue use of the unit and contact your local authorized service center or customer service for assistance.

In compliance with EPA regulations, any adjustments to the carburetor must be made by an authorized service center. An authorized service center is capable of troubleshooting carburetor problems, adjusting carburetors to perform correctly, and adjusting carburetors to compensate for altitude.

NOTE: Carburetor is set at factory. Further adjustment must be performed by an authorized service center. Contact customer service for a list of authorized service centers.

ENGINE MAINTENANCE

Cooling Fins

1. Cooling fins, air inlets, and linkages must be free from any debris before each use.

Air Filter

1. Never run engine without air cleaner properly installed. Added wear and engine failure may occur if air cleaner is not installed on engine.
2. Service air cleaner every 3 months or after 20 hours of operation. Clean filter daily in extremely dusty conditions.

Steps for Cleaning Air Filter

1. Remove the air cleaner cover by turning the thumb screw on top of the power unit counter-clockwise and lifting the cover off.
2. To remove the filter, lift the filter element off of the threaded stud.
3. Larger surface dust and dirt particles can be removed from the filter element by lightly tapping a corner of the filter against a hard surface.
4. To clean finer dust trapped in the mesh screens, split the filter by inserting a flat screwdriver between the dogs on one corner of the filter element and twisting.
5. Using an air compressor at a low pressure or a store-bought compressed air duster, blow air through the mesh from the inside.
6. Press the two filter halves back together by squeezing around the rim. Do not place pressure on the mesh or a puncture could occur.
7. Place the filter back over the threaded rod, making sure to seat the filter on the O-ring on the carburetor.
8. Place the air cleaner cover back on the saw body and turn the thumb screw clockwise until finger tight.

Spark Plug

The recommended spark plug is a L8RTF, RCJ7Y, or BPMR7A.

Steps for Removing the Spark Plug

1. Remove the air cleaner cover by turning the thumb screw on top of the power unit counter-clockwise and lifting the cover off.
2. Disconnect the spark plug cap and clean any debris from around the spark plug area.
3. Remove spark plug using the "Scwrench" multi-tool. Replace if any of the following occur; pitted electrodes, burned electrodes, cracked porcelain, or deposits around the electrodes.
4. After analysis, seat spark plug and hand turn until finger tight.

Installing Spark Plug

1. Reinstall original spark plug, tighten additional 1/2 turn.
2. Installing new spark plug, adjust spark plug gap to 0.025" (0,635mm) and tighten additional 1/8 – 1/4 turn.

NOTE: Loose spark plug may overheat and damage engine. Over tightened spark plug may damage threads in the cylinder head.

Carburetor

NOTE: Never tamper with the factory setting of the carburetor.

Saw Chain Tension Maintenance

Keeping the saw chain at the proper tension is necessary for safe operation and will help prolong the life of the saw chain and the guide bar. **Never tighten a warm/hot chain.**

1. Shut the power unit off and allow the saw to cool.
2. The saw chain should not hang down from the bottom edge of the guide bar.
3. Wearing protective gloves, hold the guide bar with one hand and pinch the chain with the free hand.
4. Pull down on the chain. It should pull away from the bar, but the drive links should not disengage the groove around the perimeter of the guide bar.
5. Add or remove tension as needed with the adjustment screw at side of bar.
6. Hold up on the guide bar nose and tighten the bar nuts with the Scwrench.

- Add tension at the beginning of every work session.
- Check tension at every re-fueling.
- Remove tension at the end of every work session.

Saw Chain Maintenance

Keeping the saw chain sharp is a critical component to operating a chainsaw. A dull saw chain will drastically reduce cutting efficiency and can pose certain safety hazards.

- Avoid unintentionally striking foreign objects. This can cause a kickback, but will also reduce the sharpness or permanently damage the saw chain.
- Avoid cutting wood that has been drug on the ground. Sand, dirt, and mud stuck to the log will dull the saw chain.
- Avoid cutting wood that may contain metal such as nails, staples, or wire.
- Avoid cutting all the way through when bucking a log. This could allow the chain to come into contact with the soil below, dulling the saw chain.

Sharpening Saw Chain Cutters (Teeth)

The saw chain included with this saw is a 91VG Chamfer Chisel™ or 91P Chamfer Chisel™ and requires a 5/32 inch round file (included in the original packaging).

When to have your saw chain sharpened:

- Sawdust becomes powder-like
- You need to force the saw into the cut
- The saw tends to cut through at an angle instead of making a straight cut
- Vibration increases
- Fuel consumption increases

Always inspect your saw chain prior to use and sharpening. Check for the following:

- Bent or burred drive links
- Broken cutters or tie-straps
- Loose rivets or broken rivet heads
- Dull, nicked, or damaged cutters.

If broken components are found, discard the chain immediately.

To properly sharpen your saw chain:

1. Be sure to have the correct size file and file guide.
2. When hand filing it's important that 1/5, or 20 percent, of the file's diameter is always held above the cutter's top plate.
3. Keep the correct top-plate filing angle line on your file guide parallel with the chain.
4. Sharpen all cutters on one side of the chain first. Sharpen by filing from the inside of each cutter to the outside. After sharpening the first side, turn the saw around and repeat the process for cutters on the other side of the chain.

5. If the chrome surface of the top or side plates is damaged, file back until such damage is removed.
6. Keep all cutters at an equal length. Begin filing on the cutter with the most damage, and file all subsequent cutters to the same length.
7. DO NOT alter or file the tops of bumper tie strap links (between each cutter) on the 91VG chain.
8. File ONLY on the "Push" stroke, do not pull the file against any metal object as this will damage the file.

It is also important to maintain the depth gauge setting throughout the lifespan of the saw chain. 91VG and 91P chains use a depth setting of 0.025". This setting should be checked and corrected every third or fourth time the saw chain is sharpened.

1. Place the correct depth-gauge tool over the chain, with one depth gauge protruding through the slot in the tool.
2. If the depth gauge extends above the slot, use a flat file to bring the depth gauge flush with the top of the tool. Use only the push stroke of the file. Pulling the file will damage the file.
3. Make sure to round over the leading edge of the depth gauge to prevent kickbacks and tie strap breakage.

STORAGE

When storing the chainsaw for periods of three months or longer:

1. Empty and clean the fuel tank in a well-ventilated area.
2. Dispose of fuel properly. Local regulations may apply. Contact your local government or hazardous material service for instructions.
3. Run the engine until the carburetor is dry. This will draw the fuel out of the carburetor, preventing costly repairs to clean gummed fuel from the fuel system.
4. Remove the saw chain and guide bar. Clean them thoroughly and treat with a rust preventative before storing.
5. Thoroughly clean the chain saw. Remove sawdust and excess bar and chain oil from the clutch cover and the area surrounding the clutch. Pay close attention when cleaning the cylinder cooling fins and the air filter.
6. Store the unit in a dry location, out of the reach of children and other unauthorized users.

TROUBLESHOOTING & REPAIR

At Earthquake, we build quality and durability into the design of our products; but no amount of careful design by us, and careful maintenance by you, can guarantee a repair-free life for your Earthquake chainsaw. Most repairs will be minor, and easily fixed by following the suggestions in the troubleshooting guide in this section.

The guide will help you pinpoint the causes of common problems and identify remedies.

For more complicated repairs, you may want to rely on your retailer, an authorized service center or Earthquake. A parts breakdown is located toward the end of this manual.

We will always be glad to answer any questions you have, or help you find suitable assistance. To order parts or inquire about warranty, call or e-mail us using the contact information found below.

ORDERING REPLACEMENT PARTS

Parts can be obtained from the store where the chainsaw was purchased or direct from the factory. To order parts visit www.getearthquake.com or call 1-800-345-6007.

For other general questions, you can e-mail us at info@getearthquake.com.

Include the following information with your order:

1. Part numbers
2. Part description
3. Quantity
4. Model number and serial number

TROUBLESHOOTING AND REPAIR

Troubleshooting Guide

While normal care and routine maintenance will extend the life of your chainsaw, prolonged or constant use may eventually require that service be performed to allow it to continue operating properly. The troubleshooting guide below lists the most common problems, causes and remedies.

⚠ WARNING

PRACTICE SAFETY AT ALL TIMES. ENGINE MUST BE TURNED OFF AND ALLOWED TO COOL, AND SPARK PLUG WIRE MUST BE DISCONNECTED AND SECURED BEFORE ATTEMPTING ANY MAINTENANCE OR REPAIR.

FAILURE TO COMPLY WITH THIS SAFETY REQUIREMENT CAN RESULT IN SERIOUS PERSONAL INJURY TO YOU OR BYSTANDERS.

PROBLEM	CAUSE	REMEDY
Starting failure	• Check fuel for water or substandard mixture	• Replace with proper fuel ***Note: Use a minimum 87 octane gasoline with NO ethanol content (50:1 mixture). If using an ethanol blended fuel, a fuel stabilizer, mixed to manufacturer specifications, is recommended.*** • Remove and dry the spark plug • Pull the starter again with no choke • Replace spark plug with a new plug
Lack of power / Poor acceleration / Rough idling	• Check for water or substandard mixture • Check air filter and fuel filter for clogging • Check carburetor for inadequate adjustment	• Replace with proper fuel • Clean • Have an authorized service center adjust the carburetor.
Oil does not come out	•Check saw and bar oil passage and ports for clogging • Check oil for substandard quality •Check oil pump pressure	• Clean • Replace •Adjust oil pump pressure
If the unit seems to need further service, consult with an authorized service shop in your area.		

ILLUSTRATED PARTS BREAKDOWN

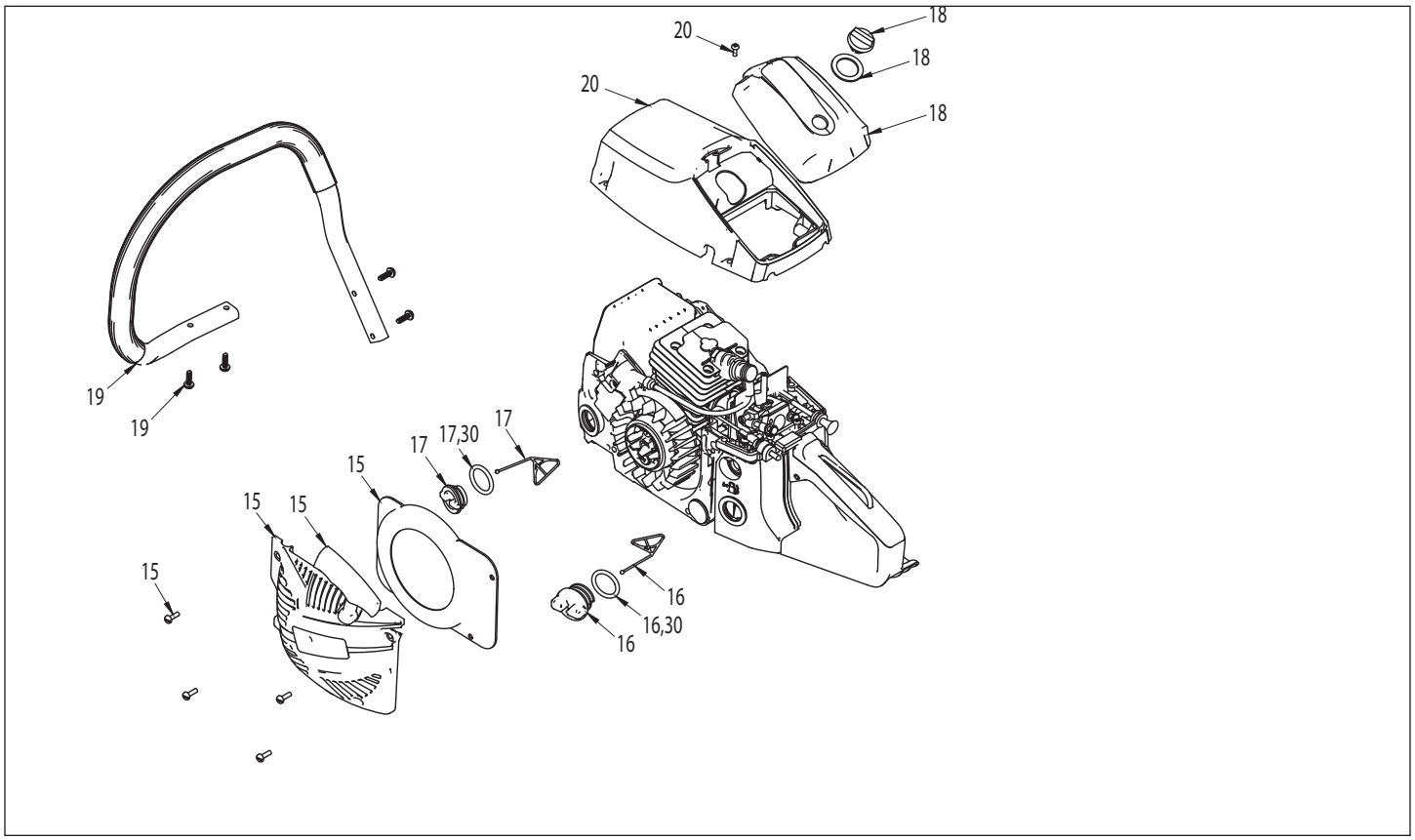

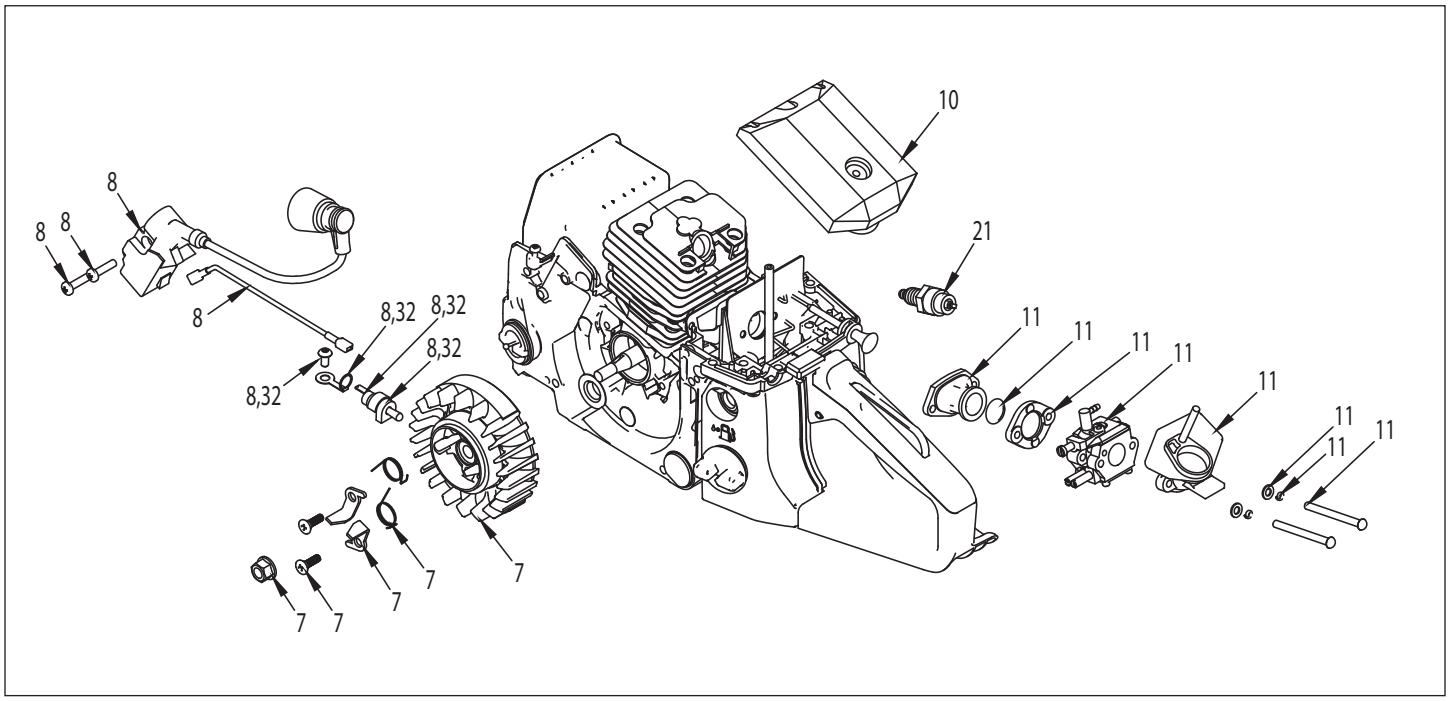

ILLUSTRATED PARTS BREAKDOWN

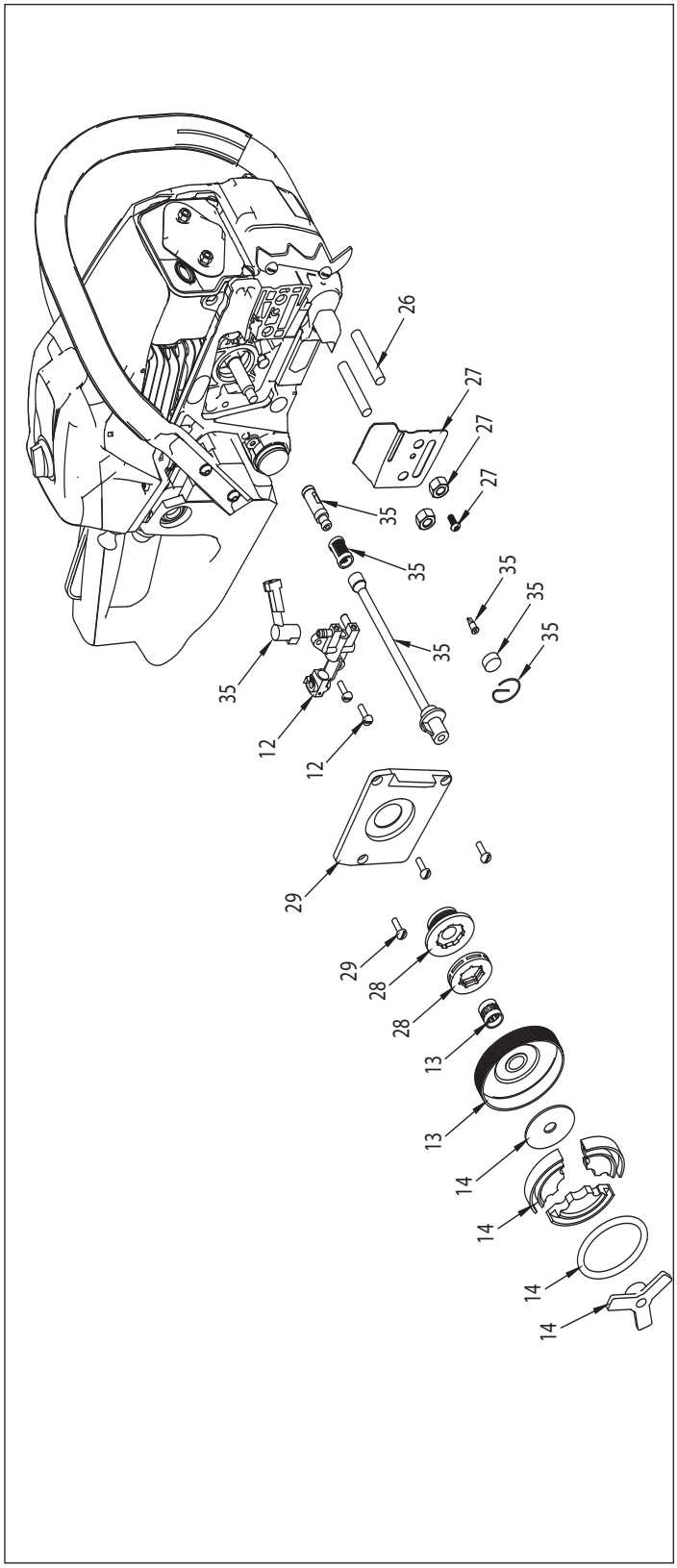

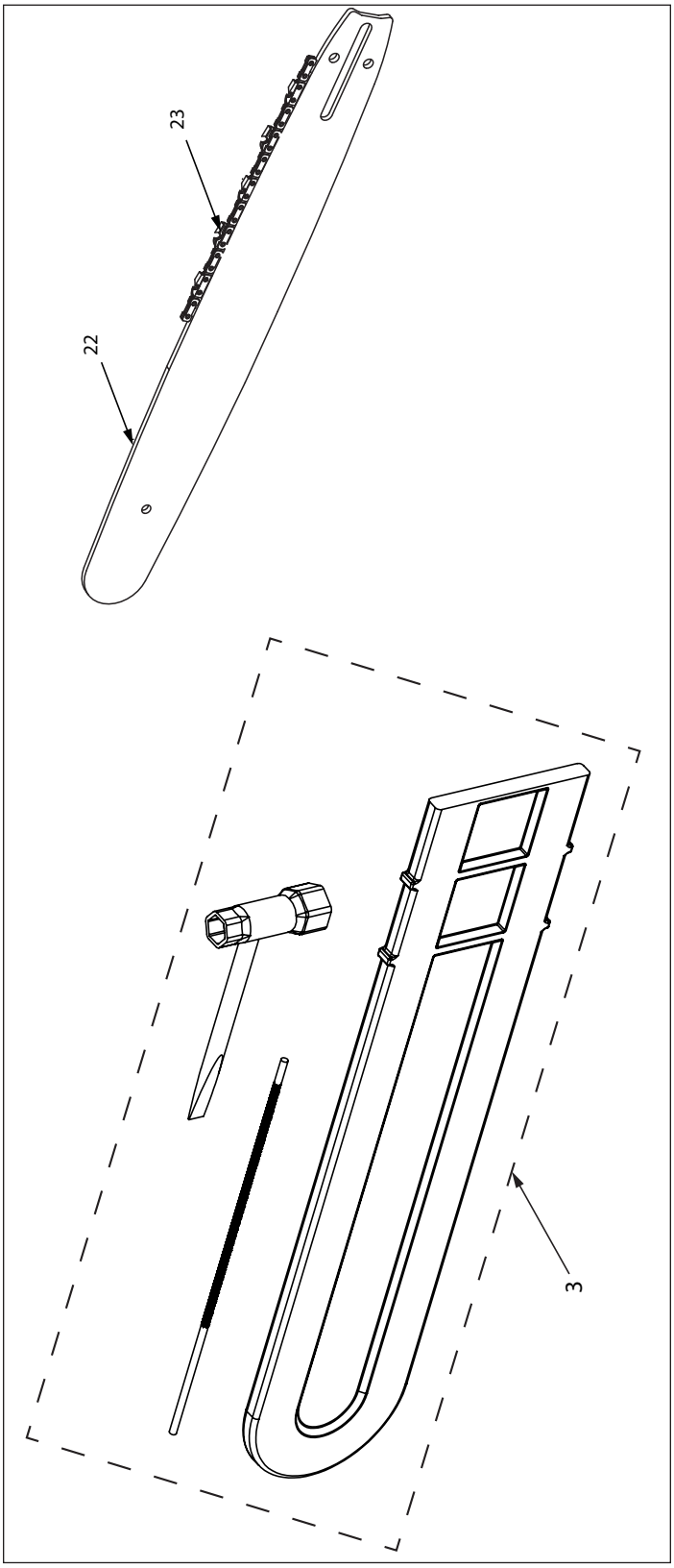

ILLUSTRATED PARTS BREAKDOWN

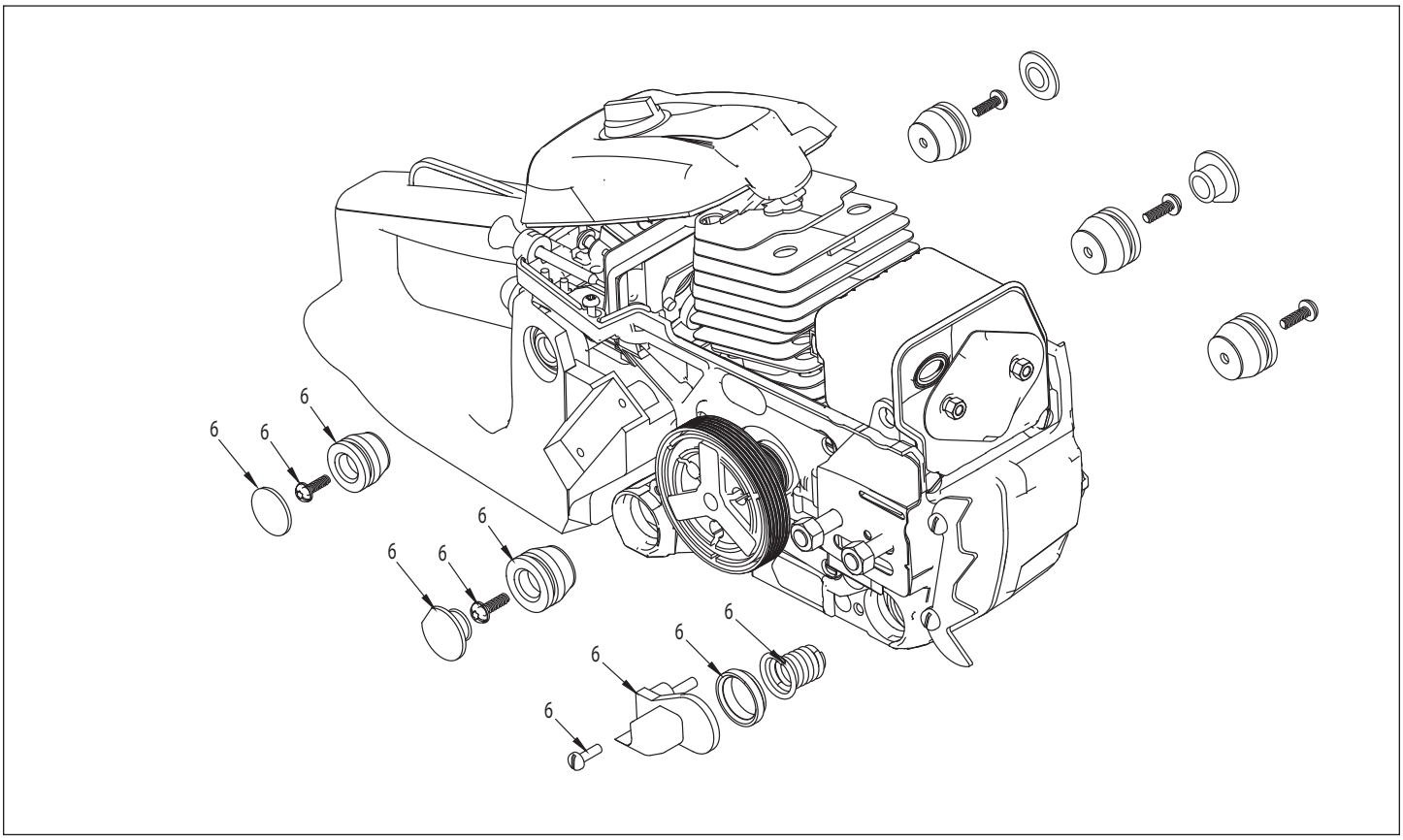

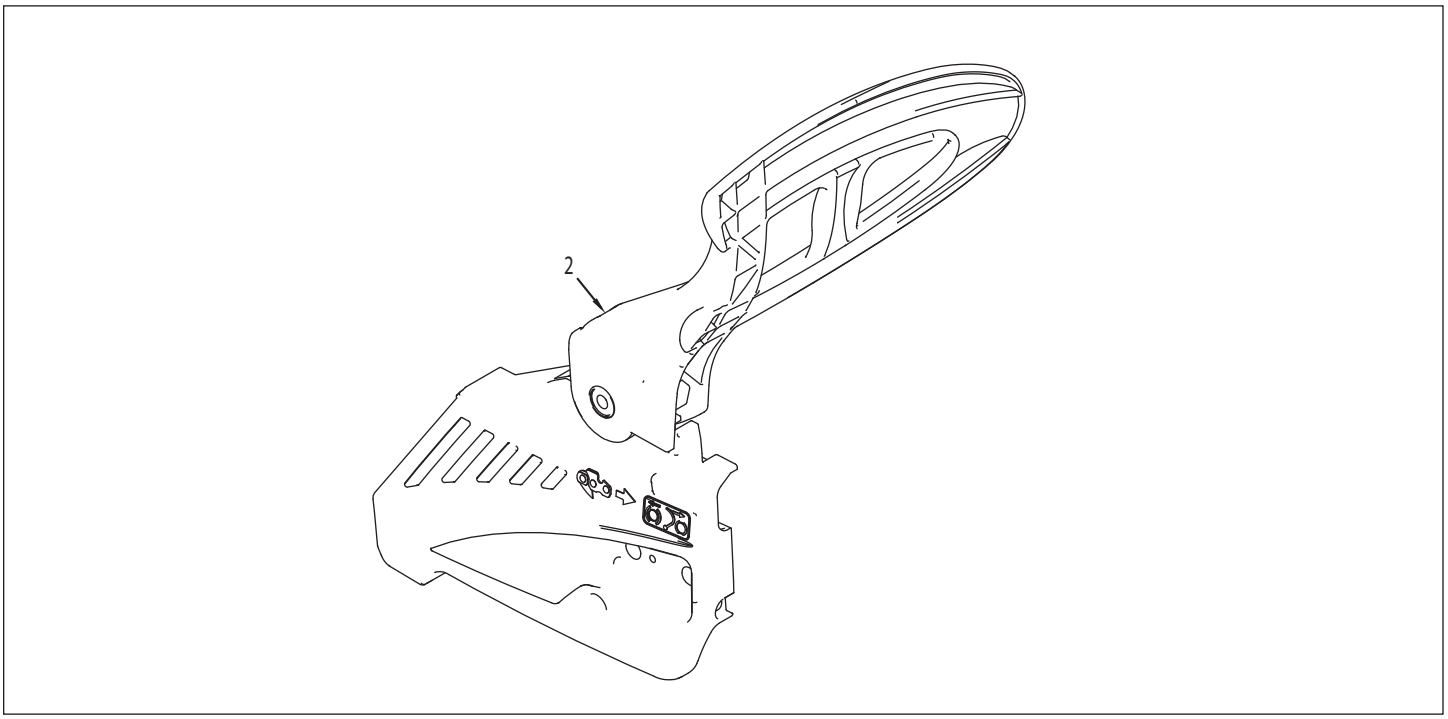

ILLUSTRATED PARTS BREAKDOWN

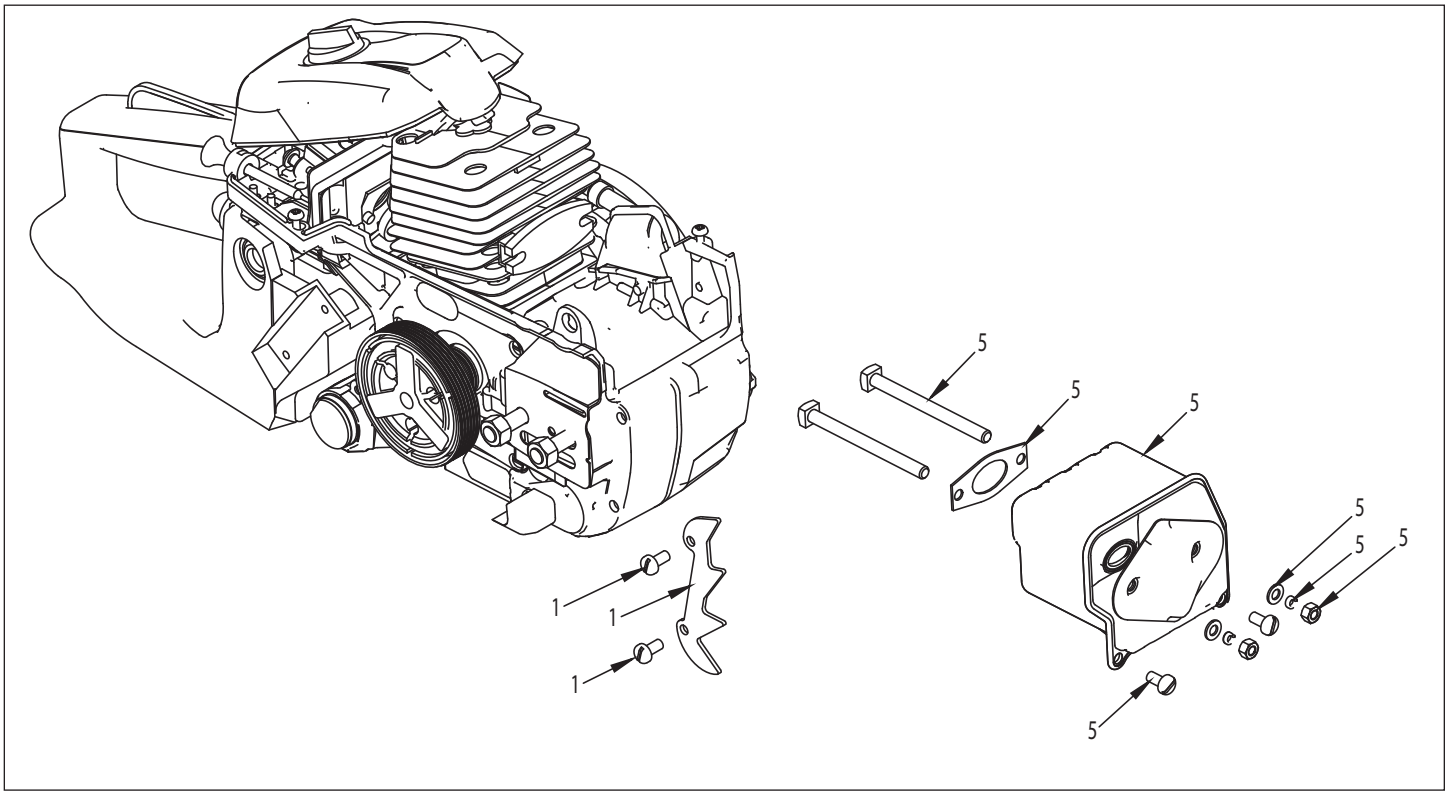

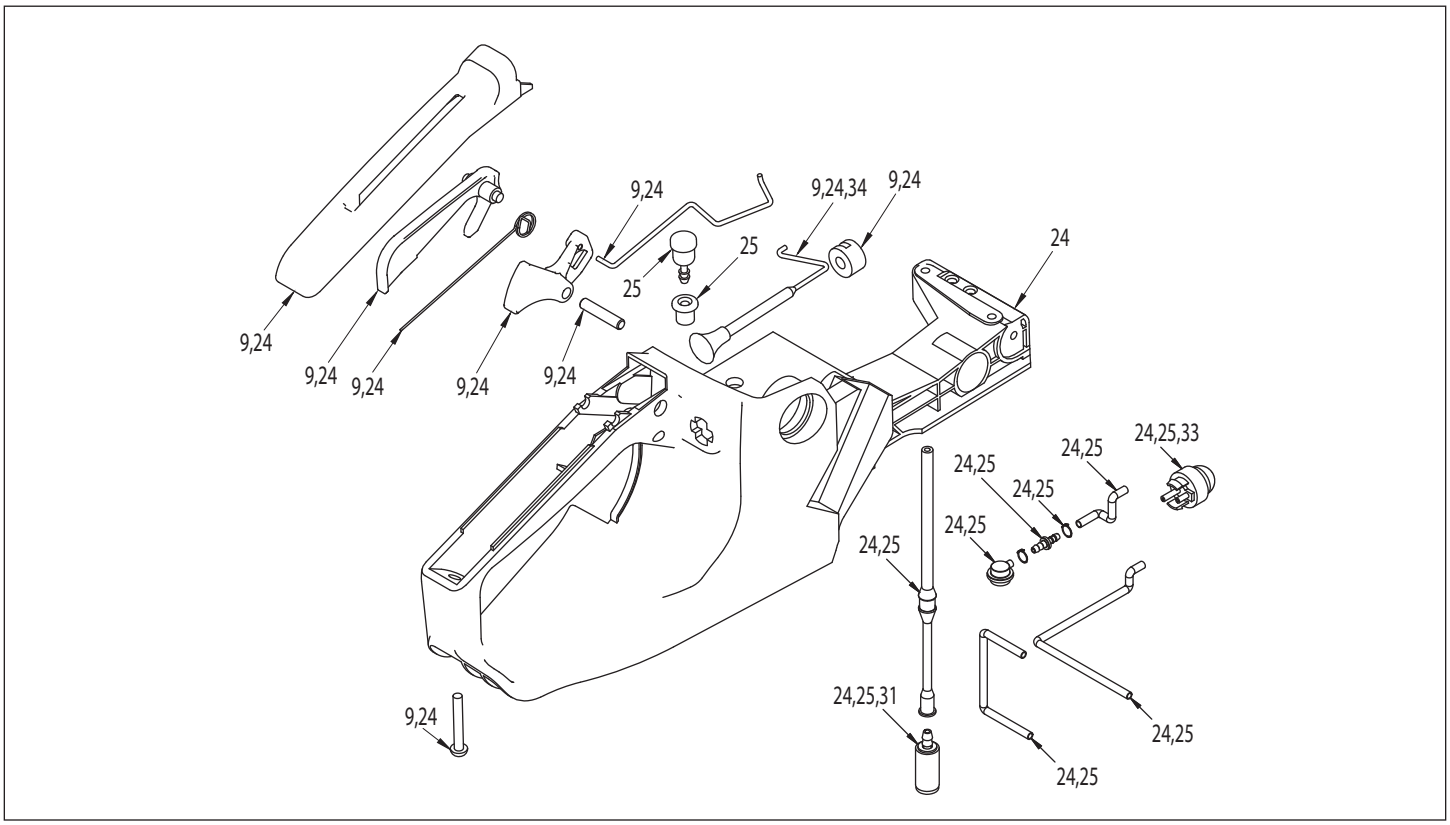

ILLUSTRATED PARTS BREAKDOWN

KEY #	PART #	DESCRIPTION	QTY.
1	14203***	KIT BUCKING SPIKE	1
2	13507	ASSEMBLY CLUTCH COVER	1
3	14204***	KIT CS4518 ACCESSORY PACK	1
4	838101	BAR NUT	1
5	14206***	KIT MUFFLER COMPLETE	1
6	14231***	KIT VIBRATION DAMPENING COMPLETE	1
7	14232***	KIT FLYWHEEL REPLACEMENT	1
8	14233***	KIT COMPLETE ELECTRICAL	1
9	13541	KIT TRIGGER ASSEMBLY	1
10	845117	AIR FILTER	1
11	13539***	KIT CARBURETOR REPLACEMENT	1
12	13538***	KIT PUMP ADJUSTABLE OIL	1
13	13537	CLUTCH DRUM W/NEEDLE BEARING	1
14	13536	ASSEMBLY CLUTCH W/WASHER	1
15	13535***	KIT RECOIL CHAINSAW	1
16	13534	ASSEMBLY FUEL CAP	1
17	13556	ASSEMBLY OIL CAP	1
18	13533	KIT AIR CLEANER COVER	1
19	13531***	KIT FORWARD HANDLE	1
20	13532	ASSEMBLY CYLINDER SHROUD	1
21	35906	SPARK PLUG L8RTF, RCJ7Y, BPMR7A	1
22	845122**	GUIDE BAR 18IN CHAINSAW	1
23	845125**	SAW CHAIN S62 18IN CHAINSAW	1
24	14257***	KIT REPLACEMENT HANDLE AND TANK	1
25	16698***	KIT FUEL LINES REPLACEMENT	1
26	14262	BAR STUDS	1
27	14263***	KIT GUIDE BAR BASE	1
28	14264***	KIT WORM GEAR WITH SHIM	1
29	14265***	KIT OILER COVER PLATE	1
30	14266***	KIT ENGINE GASKETS	1
31	FILTER	FILTER GAS TANK	1
32	14367***	KIT ON OFF SWITCH ASSEMBLY	1
33	13522	PRIMER BULB	1
34	13475	CHOKE THROTTLE	1
35	15981***	KIT OIL LINES REPLACEMENT	1

* For ordering information, contact customer service for availability.
** Oregon® bars and chains are sold at many retail stores. For your reference the corresponding part # for the bar is *180 SDEZ 095* and the part # for the chain is *91P062X*.
*** All item with this callout # are included in the kit.

CS_CE Declaration

ARDISAM.com

EC DECLARATION OF CONFORMITY

CE

Name and Address of the manufacturer:	Ardisam Manufacturing Inc. 1690 Elm Street, Cumberland, WI U.S.A 54829
Name and Address of person authorised to compile the technical file:	Mr. C. Hindle, Ardisam Europe, 3 Appleyard Close, Swinton, Manchester. M27 8AZ United Kingdom
Description of Equipment:	Chain Saw
Model / Type:	CS38, CS41, CS45
Serial No.:	*00000000000000000000000 - 50000000000000000000000*
Directives / Conformity Assessment Procedures:	Machinery Directive (2006/42/EC) / Annex VIII EMC Directive (2004/108/EC) / Art.10.1
Technical standards and specifications:	EN ISO 11681-1
Declaration:	**The person signing below declares that the above named equipment fulfils all the relevant provisions of the stated directives.**
Place of Declaration & Date:	Ardisam Inc., Cumberland, WI. USA January 2012
Signed:	
Printed Name of Authorised Signatory:	Robert Ruppel
Position in Company:	Director of Engineering

WARRANTY TERMS AND CONDITIONS

PRODUCT WARRANTY: 1-YEAR LIMITED WARRANTY

Ardisam, Inc. (Ardisam) warrants the product(s) under a one-year limited warranty to be free from defects in the material or workmanship or both for a period not exceeding twelve consecutive months from the date of original purchase by the first retail consumer or first commercial end user. "Consumer use" means personal recreational use by a retail consumer. "Commercial use" or "commercial application" means all other uses, including use for commercial, income producing or rental purposes. Once a product has experienced commercial use, it shall thereafter be considered as a commercial use product for the purpose of this warranty. This warranty applies to the original owner who provides a proof of purchase. The warranty is not transferable. The warranty period begins on the date of purchase by the first retail consumer or commercial end user, and continues for the twelve month consecutive period thereafter. Any unit used in a commercial application is covered for a period of 90 days after purchase by the first commercial end user. For the warranty to be valid, the product must be registered online, or the warranty card must be filled out and received by Ardisam, within 30 days of purchase. Ardisam shall not be obligated to ship any repair or replacement product to any location outside of the United States of America or Canada.*

For replacement parts, phone 800-345-6007.

*This warranty policy applies only to products which have not been subjected to negligent use, misuse, uses other than those indicated in the product's operator's manual, alteration, accident, use of unauthorized parts, failure to perform periodic maintenance as specified in product's operator's manual, normal wear and tear, use of unauthorized parts or repairs performed at unauthorized service centers. There is no other expressed warranty. Implied warranties, including those of merchantability and fitness for a particular purpose, are limited to one year from purchase, or to the extent permitted by law. All other implied warranties are excluded. Liability for incidental or consequential damages are excluded to the extent exclusion is permitted by law. Ardisam does not assume, and does not authorize any other person to assume for Ardisam, any liability in connection with the sale of Ardisam products. **To be at "No Charge," warranty work must be sent directly to and performed by Ardisam or an Ardisam Authorized Warranty Service Facility**. To obtain warranty service and/or replacement instructions, contact the Ardisam Customer Service Department at 800-345-6007. If you choose to ship your product to Ardisam for warranty repair, you must first have prior approval from Ardisam by calling the Ardisam Customer Service Department for a return material authorization number (RMA#). Under these circumstances, all items must be shipped prepaid. Ardisam will at no charge, repair or replace, at the discretion of Ardisam, any defective part which satisfies all conditions stated above. Ardisam retains the right to change models, specifications and price without notice. Ardisam shall not be obligated to ship any repair or replacement product to any location outside of the United States of America or Canada.

FEDERAL EMISSION CONTROL WARRANTY STATEMENT

YOUR WARRANTY RIGHTS AND OBLIGATIONS

The United States Environmental Protection Agency (EPA), together with Ardisam, Inc. (Ardisam), are pleased to explain the Emission Control System Warranty on your small off-road engine (SORE). New small off-road engines must be designed, built and equipped to meet stringent anti-smog standards the federal government. Ardisam will warrant the emission control system on your engine for the periods of time listed below provided there has been no abuse, neglect, modification or improper maintenance of your engine.

The emission control system includes all components whose failure would increase the emissions of any regulated pollutant. These components are listed in the emission-related parts list located in a subsequent section of this emissions warranty statement. Ardisam will repair your engine at no cost to you for diagnosis, replacement parts and labor, should a warrantable condition occur.

MANUFACTURER'S WARRANTY COVERAGE:

The emission control system is warranted for two years. If, during such warranty period, any emission-related part on your engine is found to be defective in materials or workmanship, repairs or replacement will be performed by a Ardisam Authorized Warranty Service Facility.

PURCHASER'S/OWNER'S WARRANTY RESPONSIBILITIES:

As the SORE purchaser/owner, you are responsible for the completion of all required maintenance as listed in your factory supplied Manual(s). For warranty purposes, Ardisam recommends that you retain all receipts covering maintenance on your SORE. However, Ardisam cannot deny warranty solely because of the lack of receipts or for your failure to ensure the completion of all scheduled maintenance.

As the SORE purchaser/owner, you should, however, be aware that Ardisam may deny any and/or all warranty coverage or responsibility if your SORE or a part/component thereof, has failed due to abuse, neglect, improper maintenance or modifications, or the use of counterfeit and/or "grey market" parts not made, supplied or approved by Ardisam.

You are responsible for presenting your SORE to an Ardisam Authorized Warranty Service Facility as soon as a problem occurs. The warranty repairs should be completed in a reasonable amount of time, not to exceed 30 days.

Warranty service can be arranged by contacting either your selling dealer or a Ardisam Authorized Warranty Service Facility. To locate the Ardisam Authorized Warranty Service Facility nearest you, call our free number:

800-345-6007

IMPORTANT NOTE: This warranty statement explains your rights and obligations under the Emission Control System Warranty (ECS Warranty), which is provided to you by Ardisam pursuant to federal law. See also the Ardisam "Product Warranty" (non-emission warranties), which is enclosed herewith on a separate sheet or located in additional materials accompanying this product. The ECS Warranty applies only to the emission control system of your new engine. If there is any conflict in terms between the ECS Warranty and the Ardisam Warranty, the ECS Warranty shall apply except in circumstances where the Ardisam Warranty may provide a longer warranty period. Both the ECS Warranty and the Ardisam Warranty describe important rights and obligations with respect to your new engine.

Warranty service can be performed only by an Ardisam Authorized Warranty Service Facility. When requesting warranty service, evidence must be presented showing the date of the sale to the original purchaser/owner. Ardisam will not be responsible for any and/or all damages or losses incurred while the engine is being transported/shipped for inspection or warranty repairs.

IF YOU HAVE ANY QUESTIONS REGARDING YOUR WARRANTY RIGHTS AND RESPONSIBILITIES, YOU SHOULD CONTACT ARDISAM AT THE ADDRESS ON THE BACK COVER.

II. EMISSION CONTROL SYSTEM WARRANTY

Emission Control System Warranty (ECS Warranty) for equipment using small off-road engines:

(a) Applicability: This warranty shall apply to equipment that uses small off-road engines. The ECS Warranty Period shall begin on the date the new engine or equipment is purchased by/delivered to its original, end-use purchaser/owner and shall continue for 24 consecutive months thereafter.

(b) General Emissions Warranty Coverage: Ardisam warrants to the original, end-use purchaser/owner of the new engine or equipment and to each subsequent purchaser/owner that each of its engines is...

(1) Designed, built and equipped so as to conform with all applicable regulations adopted by the EPA pursuant to their respective authority, and

(2) Free from defects in materials and workmanship which, at any time during the ECS Warranty Period, may cause a warranted emissions-related part to fail to be identical in all material respects to the part as described in the engine manufacturer's application for certification.

The ECS Warranty only pertains to emissions-related parts on your engine, as follows:

(1) Any warranted, emissions-related parts that are not scheduled for replacement as required maintenance in the Maintenance Schedule (located in the section of the Manual(s) pertaining to maintenance) shall be warranted for the ECS Warranty Period. If any such part fails during the ECS Warranty Period, it shall be repaired or replaced by Ardisam according to Subsection (4) below. Any such part repaired or replaced under the ECS Warranty shall be warranted for the remainder of the ECS Warranty Period.

(2) Any warranted, emissions-related part that is scheduled only for regular inspection as specified in the Maintenance Schedule (located in the section of the Manual(s) pertaining to maintenance) shall be warranted for the ECS Warranty Period. A statement in such written instructions to the effect of "repair or replace as necessary" shall not reduce the ECS Warranty Period. Any such part repaired or replaced under the ECS Warranty shall be warranted for the remainder of the ECS Warranty Period.

(3) Any warranted, emissions-related part that is scheduled for replacement as required maintenance in the Maintenance Schedule (located in the section of the Manual(s) pertaining to maintenance) shall be warranted for the period of time prior to the first scheduled replacement point for that part. If the part fails prior to the first scheduled replacement, the part shall be repaired or replaced by Ardisam according to Subsection (4) below. Any such emissions-related part repaired or replaced under the ECS Warranty shall be warranted for the remainder of the ECS Warranty Period prior to the first scheduled replacement point for such emissions-related part.

(4) Repair or replacement of any warranted, emissions-related part under this ECS Warranty shall be performed at no charge to the owner at a Ardisam Authorized Warranty Service Facility.

(5) When the engine is inspected by a Ardisam Authorized Warranty Service Facility, the owner shall not be held responsible for diagnostic costs if the repair is deemed warrantable.

(6) Ardisam shall be liable for damages to other original engine components or approved modifications proximately caused by a failure under warranty of any emission-related part covered by the ECS Warranty.

(7) Throughout the ECS Warranty Period, Ardisam shall maintain a supply of warranted emission-related parts sufficient to meet the expected demand for such emission-related parts.

(8) Any Ardisam authorized and approved emission-related replacement part may be used in the performance of any ECS Warranty maintenance or repairs and will be provided without charge to the purchaser/owner. Such use shall not reduce Ardisam's ECS Warranty obligations.

(9) Unapproved, add-on, modified, counterfeit and/or "grey market" parts may not be used to modify or repair a Ardisam engine. Such use voids this ECS Warranty and shall be sufficient grounds for disallowing an ECS Warranty claim. Ardisam shall not be held liable hereunder for failures of any warranted parts of a Ardisam engine caused by the use of such an unapproved, add-on, modified, counterfeit and/or "grey market" part.

EMISSION-RELATED PARTS INCLUDE THE FOLLOWING (IF EQUIPPED):

(1) Fuel Metering System
(i) Carburetor and internal parts (and/or pressure regulator or fuel injection system).
(ii) Air/fuel ratio feedback and control system.
(iii) Cold start enrichment system.
(iv) Fuel Tank.

(2) Air Induction System
(i) Controlled hot air intake system.
(ii) Intake manifold.
(iii) Air filter.

(3) Ignition System
(i) Spark Plugs.
(ii) Magneto or electronic ignition system.
(iii) Spark advance/retard system.

(4) Exhaust Gas Recirculation (EGR) System
(i) EGR valve body, and carburetor spacer if applicable.
(ii) EGR rate feedback and control system.

(5) Air Injection System
(i) Air pump or pulse valve.
(ii) Valves affecting distribution of flow.
(iii) Distribution manifold.

(6) Catalyst or Thermal Reactor System
(i) Catalytic converter.
(ii) Thermal reactor.
(iii) Exhaust manifold.

(7) Particulate Controls
(i) Traps, filters, precipitators, and any other device used to capture particulate emissions.

(8) Miscellaneous Items Used in Above Systems
(i) Electronic controls.
(ii) Vacuum, temperature, and time sensitive valves and switches.
(iii) Hoses, belts, connectors, and assemblies.

Earthquake, Division of Ardisam, Inc.
1160 8th Avenue, PO Box 666
Cumberland, WI 54829
800-345-6007 | Fax 715-822-2223
E-mail: info@getearthquake.com

All weights, specifications and features are approximate and are subject to change without notice. Due to continuous product improvements, product images may not be exact. Items used for props not included. Some assembly may be required.