VIPER®
ENGINES

Operator's Manual
Original Operating Instructions

# Viper® 99cc 4-Cycle Engine

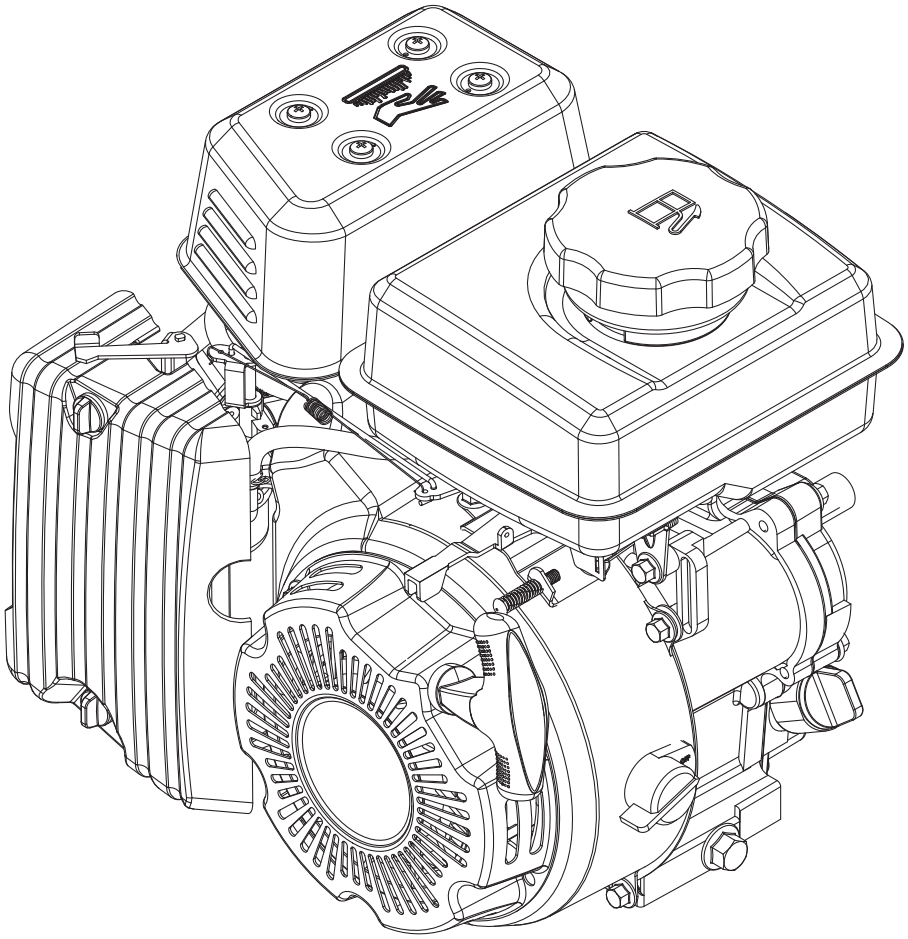

***Includes Model:***

***25036 - 99cc***

Email for more information
***info@ardisam.com***

P/N: 30105
ECN: 11813
REV1: 08/30/17
© 2017 Ardisam, Inc.
All Rights Reserved

## INTRODUCTION

Congratulations on your investment in quality. Thank you for purchasing a Viper® Engine. We have worked to ensure that your engine meets the highest standards for usability and durability. With proper care, your engine will provide many years of service.

**Please read this entire manual before installation and use. Viper® reserves the right to change, alter or improve the product and this document at any time without prior notice.**

## CONTENTS

Introduction/Contents/Federal Emissions Information/Registration and Service/Ownership Records ..... 2
Warnings and Safety Precautions ..... 3
Engine Safety Precautions ..... 4-5
Service ..... 5
Hazard Symbols and Meanings/Control and Operating Symbols/Specifications ..... 6
Safety Decals/Features ..... 7
Operation ..... 8-11
Maintenance and Storage ..... 12-16
Troubleshooting and Repair ..... 16
Troubleshooting Guide ..... 17
Illustrated Parts Breakdown - 99cc Engine ..... 20-21
Warranty ..... 22

## FEDERAL EMISSION INFORMATION

Viper warrants to the retail purchaser, that this small, off-road engine was designed, built and equipped to conform at the time of initial sale to all applicable regulations of the U.S. Environmental Protection Agency (EPA) and those of the State of California (CARB).

## REGISTRATION AND SERVICE

Record the engine model number and serial number in the space provided for easy reference when ordering parts or requesting technical support. Excluding emissions-related warranty items, the warranty is valid only if the completed registration is received by Ardisam within 30 days of purchase. (SEE WARRANTY SECTION FOR MORE INFORMATION.) You can register your warranty online by visiting www.ardisam.com, or by mailing it to: Ardisam, Inc., 1160 8th Avenue, Cumberland, WI 54829. If you prefer phone, call our customer service department at (800) 345-6007 Mondays through Fridays from 8 a.m. to 5 p.m. CST.

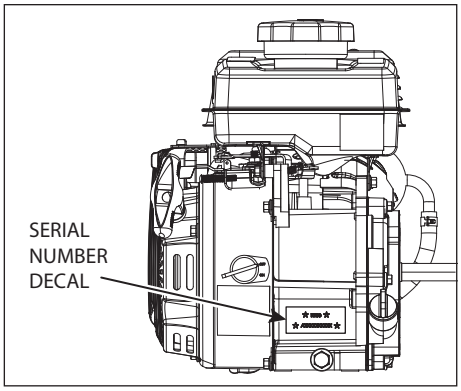


| OWNERSHIP RECORDS | | |
|---|---|---|
| Owner's Name: | | |
| Owner's Address: | | |
| City: | State/Province: | Zip Code/Postal Code: |
| Engine Model Number: | Engine Serial Number: | |
| Date of Purchase: | | |
| Notes: | | |
| | | |

**This manual may contain information for several models. Read and keep this manual for future reference. This manual contains important information on SAFETY, ASSEMBLY, OPERATION, AND MAINTENANCE. The owner must be certain that all the product information is included with the unit. This information includes the MANUAL, the REPLACEMENT PARTS and the WARRANTIES. This information must be included to make sure state laws and other laws are followed. This manual should remain with the engine even if it is resold.**

## WARNINGS AND SAFETY PRECAUTIONS

### Owner's Responsibility

Accurate assembly and safe and effective use of the machine is the owner's responsibility.

- Read and follow all safety instructions.
- Carefully follow all assembly instructions.
- Maintain the machine according to directions and schedule included with this Viper® operator's manual.
- Ensure that anyone who uses the machine is familiar with all controls and safety precautions.

### Special Messages

Your manual contains special messages to bring attention to potential safety concerns, machine damage as well as helpful operating and servicing information. Please read all the information carefully to avoid injury and machine damage.

***NOTE: General information is given throughout the manual that may help the operator in the operation or service of the machine.***

**THIS SYMBOL POINTS OUT IMPORTANT SAFETY INSTRUCTIONS WHICH IF NOT FOLLOWED COULD ENDANGER YOUR PERSONAL SAFETY. READ AND FOLLOW ALL INSTRUCTIONS IN THIS MANUAL BEFORE ATTEMPTING TO OPERATE THIS EQUIPMENT.**

**Before Operating Equipment:**

**Please read this section carefully.** Read entire operating and maintenance instructions for this product. Failure to follow instructions could result in serious injury or death. Operate the machine according to the safety instructions outlined here and inserted throughout the text. Anyone who uses this machine must read the instructions and be familiar with the controls.

### WARNING

**WARNING INDICATES A HAZARD WHICH, IF NOT AVOIDED, COULD RESULT IN DEATH OR SERIOUS INJURY AND/OR PROPERTY DAMAGE.**

### CAUTION

**CAUTION INDICATES YOUR EQUIPMENT CAN BE DAMAGED IF THE SAFETY INSTRUCTIONS THAT FOLLOW THIS SIGNAL WORD ARE NOT OBEYED.**

### IMPORTANT

**INDICATES HELPFUL INFORMATION FOR PROPER ASSEMBLY, OPERATION, OR MAINTENANCE OF YOUR EQUIPMENT.**

### WARNING

**CALIFORNIA PROPOSITION 65 WARNING**

**ENGINE EXHAUST FROM THIS PRODUCT CONTAINS CHEMICALS KNOWN TO THE STATE OF CALIFORNIA TO CAUSE CANCER, BIRTH DEFECTS, OR OTHER REPRODUCTIVE HARM.**

### WARNING

**YOU MUST READ, UNDERSTAND AND COMPLY WITH ALL SAFETY AND OPERATING INSTRUCTIONS IN THIS MANUAL BEFORE ATTEMPTING TO SETUP AND OPERATE YOUR MACHINE.**

**FAILURE TO COMPLY WITH ALL SAFETY AND OPERATING INSTRUCTIONS CAN RESULT IN LOSS OF MACHINE CONTROL, SERIOUS PERSONAL INJURY TO YOU AND/OR BYSTANDERS, AND RISK OF EQUIPMENT AND PROPERTY DAMAGE. THE TRIANGLE IN THE TEXT SIGNIFIES IMPORTANT CAUTIONS OR WARNINGS WHICH MUST BE FOLLOWED.**

## ⚠ WARNING

**ENGINES GIVE OFF CARBON MONOXIDE, AN ODORLESS, COLORLESS, POISONOUS GAS. CARBON MONOXIDE MAY BE PRESENT EVEN IF YOU DO NOT SMELL OR SEE ANY ENGINE EXHAUST. BREATHING CARBON MONOXIDE CAN CAUSE NAUSEA, FAINTING OR DEATH, IN ADDITION TO DROWSINESS, DIZZINESS AND CONFUSION.**

**IF YOU EXPERIENCE ANY OF THESE SYMPTOMS, SEEK FRESH AIR AND MEDICAL ATTENTION IMMEDIATELY.**

**START AND RUN ENGINE OUTDOORS. DO NOT START OR RUN ENGINE IN ENCLOSED AREA, EVEN IF DOORS OR WINDOWS ARE OPEN.**

**HOT GASES ARE A NORMAL BY-PRODUCT OF A FUNCTIONING CATALYTIC CONVERTER. FOLLOW ALL SAFETY INSTRUCTIONS TO PREVENT BURNS AND FIRES.**

**DO NOT ALTER/MODIFY ENGINE:**

**NEVER ALTER OR MODIFY THE ENGINE FROM THE FACTORY. SERIOUS INJURY OR DEATH MAY OCCUR IF ENGINE IS MODIFIED OR ALTERED.**

**WHEN WORKING ON OR REPLACING PARTS FOR THE ENGINE OR PRODUCT, YOU MUST ALWAYS DISCONNECT SPARK PLUG WIRE FROM THE SPARK PLUG AND KEEP IT AWAY FROM THE SPARK PLUG.**

## ENGINE SAFETY PRECAUTIONS

### Preventing Carbon Monoxide Poisoning

- Never try to ventilate engine exhaust indoors. Carbon monoxide can reach dangerous levels very quickly.
- Never run engine outdoors where exhaust fumes may be pulled into a building.
- Never run engine outdoors in a poorly ventilated area where the exhaust fumes may be trapped and not easily taken away. (Examples include: in a large hole or areas where hills surround your working area.)
- Never run engine in an enclosed or partially enclosed area. (Examples include: buildings that are enclosed on one or more sides, under tents, car ports or basements.)
- Always run the engine with the exhaust and muffler pointed in the direction away from the operator.
- Never point the exhaust muffler towards anyone. People should always be many feet away from the operation of the engine and its attachments.
- Do not change the engine governor settings or over-speed the engine.
- Stay away from rotating parts. Place protective covers over rotating parts.
- Do not use engine around dry brush, cloth rags, or other flammable materials.
- Always keep materials and debris clear of muffler guard and other hot engine parts.
- Never operate the engine without the muffler guard in place.
- Always make sure the exhaust pipe is free of foreign objects.
- The engine exhaust becomes very hot during operation. Keep engine at least three feet away from buildings and other equipment during operation.
- Wear appropriate clothing such as a long-sleeved shirt or jacket. Also wear long trousers or slacks. Do not wear shorts. Never wear sandals, sneakers, or open shoes, and never operate the machine with bare feet.
- Do not wear loose clothing or jewelry. They can get caught in moving parts. Always keep hands, feet, hair and loose clothing away from any moving parts on engine and machine.

### Gasoline Fires and Handling Fuel Safely

Use extra care in handling gasoline and other fuels. They are flammable and vapors are explosive.

- When storing extra fuel be sure that it is in an appropriate container and away from any fire hazards. Prevent fire and explosion caused by static electric discharge. Use only nonmetal, portable fuel containers approved by the Underwriter's Laboratory (U.L.) or the American Society for Testing & Materials (ASTM).
- Always fill fuel tank outside in a well ventilated area. Never fill your fuel tank with fuel indoors. (Examples include: basement, garage, barn, shed, house, porch, etc.) Never fill tank near appliances with pilot lights, heaters, or other ignition sources. If the fuel has to be drained, this should be done outdoors and with the proper equipment. Do not pour fuel from fuel tank. The drained fuel should be stored in a container specifically designed for fuel storage or it should be disposed of carefully.
- Never remove the fuel cap or add fuel with the engine running. Stop engine and allow to cool before removing the fuel cap/and or refilling the engine.
- Do not smoke near or while handling engine fuel.
- Never drain fuel from engine in an enclosed area.
- During storage, tightly screw down fuel cap.
- Never pour fuel from engine fuel tank.
- Never siphon fuel by mouth to drain fuel tank.
- Always have an adult fill the fuel tank and never allow children to fill the engine.
- Never allow an adult or anyone under the influence of drugs or alcohol to fill engine.
- When storing gasoline or equipment with fuel in the tank, store away from furnaces, stoves, water heaters or other appliances that have a pilot light or other ignition source because they can ignite gasoline vapors.

### Burns and Fires

- The muffler, muffler guard and other parts of the engine become extremely hot during the operation of the engine. These parts remain extremely hot after the engine has stopped.

### Prevention of Burns and Fires

- Never remove the muffler guard from the engine.
- Never touch the muffler guard because it is extremely hot and will cause severe burns.
- Never touch parts of the engine that become hot after operation.
- Always keep materials and debris away from muffler guard and other hot parts of the engine to avoid fires.
- This engine is designed to operate using a catalytic converter which contributes to the engine's compliance with the EPA

## SERVICE

- Always stop the engine whenever you leave the equipment, before cleaning, repairing or inspecting the unit. Engine should be turned off and cool, spark plug wire must be removed from spark plug before any repairs or adjustments are attempted. Never make adjustments or repairs with the engine (motor) running. Disconnect the spark plug wire, and keep the wire away from the plug to prevent accidental starting.
- Always wear eye protection when you make adjustments or repairs.
- Keep all nuts and bolts tight and keep equipment in good condition. Never tamper with safety devices. Check their proper operation regularly.
- When servicing or repairing the engine, do not tip the engine over or up unless specifically instructed to do so in this manual. Service and repair procedures can be done with the engine in an upright position. Some procedures will be easier if the engine is lifted on a raised platform or working surface.
- To reduce fire hazard, keep engine free of grass, leaves, or other debris build-up. Clean up oil or fuel spillage. Allow engine to cool before storing.
- Stop and inspect the equipment if you strike an object. Repair, if necessary, before restarting.
- Clean and replace safety and instruction decals as necessary.
- To guard against engine over-heating, always have engine debris filter mounted and clean.
- Inspect engine before storage. When not in use, disconnect spark plug lead and store indoors in a dry place locked or otherwise inaccessible to children.
- Use only original equipment parts from Viper, including all nuts and bolts.

## HAZARD SYMBOLS AND MEANINGS

A: Warning!

B: Avoid Injury From Rotating Tines.

C: Read Owner's Manual Before Operating Machine.

D: Remove Objects that Could Be Thrown By This Machine.

E: Dangerous Moving Parts.

F: Be Aware of Moving and Rotating Parts.

G: Wear Ear and Eye Protection At All Times.

H: Do Not Service or Adjust Moving Parts Unless Engine is Stopped and Spark Plug Wire is Disconnected.

I: Dress Appropriately And Wear Sturdy Footwear.

J: Toxic Fumes—Do Not Operate in Unventilated Areas.

K: Hot Surfaces.

L: Fire Hazards.

M: Do Not Use In Thunderstorms--For severe weather, stop operation of this machine and seek shelter.

N: Team Lift--For your safety, always have at least two people when lifting this machine.

O: Do Not Till Above Underground Utility Lines And Pipes.

P: Do Not Operate When Children Or Others Are Around.

## CONTROL AND OPERATING SYMBOLS

Pictured below are control and operating symbols on the unit or in this manual. Before you operate your unit, learn and understand the purpose for each symbol.

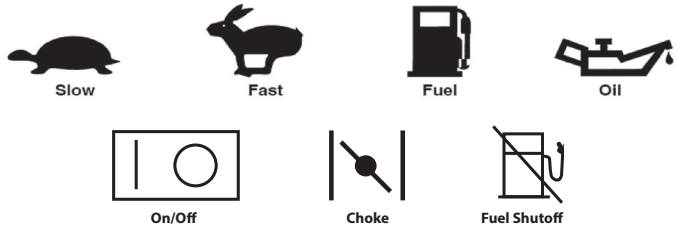


## SPECIFICATIONS

| | |
|---|---|
| Displacement/Cycle | 99cc; 4-Cycle |
| Ignition Type | Electronic ignition |
| Cooling System | Forced air cooling |
| Idling Carburetor Adjust | 1600 +/- 200 RPM |
| Valve Clearance | Cold engine-Intake: 0.10 - 0.15 mm;<br>Exhaust:<br>0.15 - 0.20 mm |
| Maximum Torque | 5.0 NM/3600 RPM (3.69 ft-lb/3600 RPM) |
| Bore and Stroke | 56 x 40 mm |
| Spark Plug Type | 0.030" (0.7-0.8 mm gap) LG E5RTC |
| Fuel Type | Minimum 87 octane gasoline with NO ethanol content.<br>***NOTE:*** *If using an ethanol blended fuel, a fuel stabilizer, mixed to manufacturer specifications, is recommended. DO NOT use E85 ethanol blend fuels.* |
| Fuel Tank Capacity | Approximately .53 gallons (2.0 L or 67 oz) |
| Drive Shaft Type | 16mm, 60.1mm from end of shaft to mounting surface, 4.78 mm x 45 mm full key, drilled and tapped M6-6H, 25 mm min., full thread. |
| Start Type | Recoil |
| Speed | 3800 RPM |
| Oil Capacity and Type | 0.37 quart (0.35 liters or 11.83 oz); 10W-30 (in freezing weather use 5W-30) |
| Weight | 23.2 lb, dry (10.5 kg, dry) |
| Overall Dimensions | 310 mm x 290 mm x 310 mm |

## SAFETY DECALS

This engine has been designed and manufactured to provide you with the safety and reliability you would expect from an industry leader in outdoor power equipment manufacturing.

Although reading this manual and the safety instructions it contains will provide you with the necessary basic knowledge to operated this equipment safely and effectively, we have placed several safety labels on the engine to remind you of this important information while you are operating the unit.

These safety labels are illustrated on page 7, and are shown here to help familiarize you with the location and content of the safety messages you will see as you perform normal operations. Please, review these decals now, and if you have any questions regarding their meaning or how to comply with these instructions, reread the complete safety instruction text in this manual. For additional questions contact Ardisam customer service.

## FEATURES

ENGINE COMPONENTS 99cc.

This is a 4-cycle air cooled engine that utilizes a horizontal shaft and an oil slinger lubricated system.

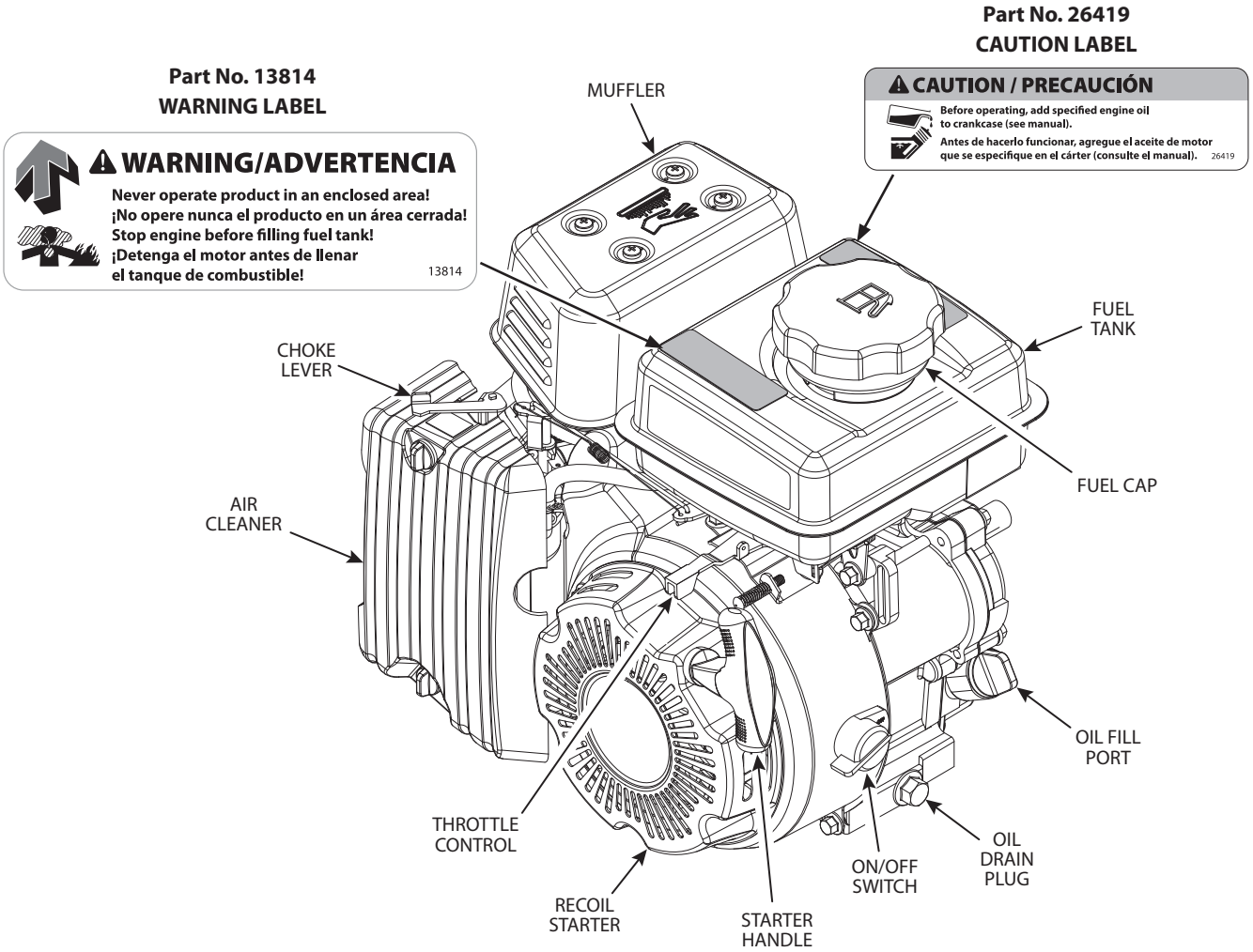

**WARNING**

**DO NOT ATTEMPT TO START ENGINE IN THE FOLLOWING WAYS:**

- **DO NOT USE STARTING FLUID.**
- **DO NOT SPRAY FLAMMABLE LIQUIDS OR VAPORS INTO AIR CLEANER, CARBURETOR OR SPARK PLUG CHAMBER.**
- **DO NOT REMOVE SPARK PLUG AND PULL ON STARTER ROPE. FLAMMABLE FUEL CAN SPRAY OUT AND IGNITE FROM A SPARK FROM SPARK PLUG.**

**DO NOT REFUEL WHILE SMOKING, NEAR OPEN FLAME, OR OTHER POTENTIAL HAZARDS.**

**FUEL IS HIGHLY FLAMMABLE AND MUST BE HANDLED WITH CARE. NEVER FILL THE TANK WHEN THE ENGINE IS HOT OR RUNNING. ALWAYS MOVE OUTDOORS TO FILL TANK.**

**ALWAYS PERFORM A PRE-OPERATION INSPECTION BEFORE EACH OPERATION AND CORRECT ANY PROBLEM.**

**IMPROPER MAINTENANCE OF THIS ENGINE, OR FAILURE TO CORRECT A PROBLEM BEFORE OPERATION, CAN CAUSE A MALFUNCTION.**

**SERIOUS INJURY OR DEATH CAN OCCUR IF THIS WARNING IS NOT COMPLIED WITH.**

## OPERATION

### Pre-Operation Inspection

1. Check that engine is filled with the proper amount and type of oil. For the most appropriate type of oil to use, see "Choosing Oil Type" chart on page 9.
2. Check that the engine has the appropriate amount of fuel.
3. Examine underneath and around engine for signs of oil or fuel leaks.
4. Inspect fuel hoses and connections for tightness and fuel seepage.
5. Look for signs of engine damage.
6. Check that all guards and shields are in place, and all screws, nuts and bolts are tightened.
7. Eliminate excessive debris around muffler and recoil starter.
8. Be sure air filter and cylinder fins are clean and free of debris.
9. Check the equipment powered by this engine. Review the operator's manual provide with the equipment powered by this engine for any safety and warning precautions and/or procedures that should be followed before starting this engine.

### Checking And Filling The Fuel Tank

Be sure the engine is located on a level surface before checking or refilling fuel. Use unleaded regular, unleaded premium automotive fuels only. Low/no ethanol blends recommended. Fuel may contain up to 10% ethanol. **DO NOT mix oil with fuel.**

**NOTE: If using ethanol blends, it is recommended you also use an ethanol fuel treatement to protect against corrosion.**

1. Make sure engine is cool and not running while filling.
2. Remove fuel cap.
3. Fill tank to fuel level limit (2.0 L). **SEE FIGURE 1**

***Note: Do not overfill.***

3. Replace cap and remove any spilled fuel before operating.

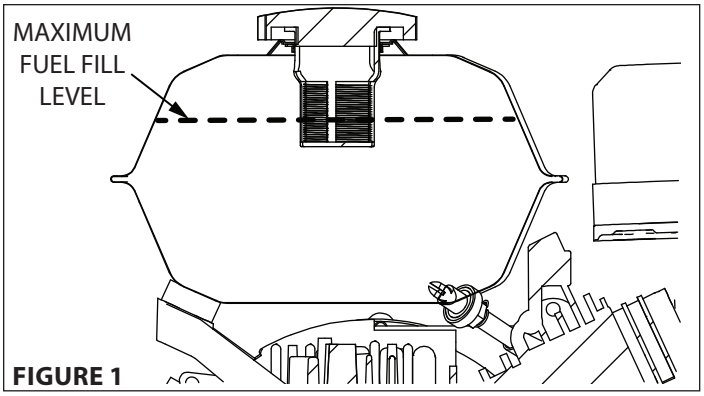

**FIGURE 1**

**WARNING**

**ENGINE IS SHIPPED FROM FACTORY WITHOUT OIL. YOU MUST ADD ENGINE OIL BEFORE STARTING ENGINE.**

**ENGINE OIL IS HAZARDOUS TO YOUR HEALTH. DISPOSE OF OIL APPROPRIATELY. USE A SAFE DISPOSAL/RECYCLING CENTER.**

- **ALWAYS PERFORM A PRE-OPERATION INSPECTION BEFORE EACH OPERATION AND CORRECT ANY PROBLEM.**
- **IMPROPER MAINTENANCE OF THIS ENGINE, OR FAILURE TO CORRECT A PROBLEM BEFORE OPERATION, CAN CAUSE A MALFUNCTION.**
- **SERIOUS INJURY OR DEATH CAN OCCUR IF THIS WARNING IS NOT COMPLIED WITH.**

**Checking and Adding Oil**

Be sure the engine is located on a level surface before checking or refilling oil.

1. Clean around oil fill area and drain plug. **SEE FIGURE 2**
2. Unscrew dipstick and wipe clean with cloth. **SEE FIGURE 2**
3. Reinsert and tighten dipstick.
4. Unscrew and check dipstick. If no oil shows on the dipstick, refill to the top thread of the oil fill oil.
5. Change oil if contaminated.

***NOTE: Viper engine oil may be put in through the oil dipstick hole or through the oil fill plug opening. If an oil plug is present, loosen screw and fill oil until oil level is even with top thread in plug hole.***

**Choosing Oil Type**

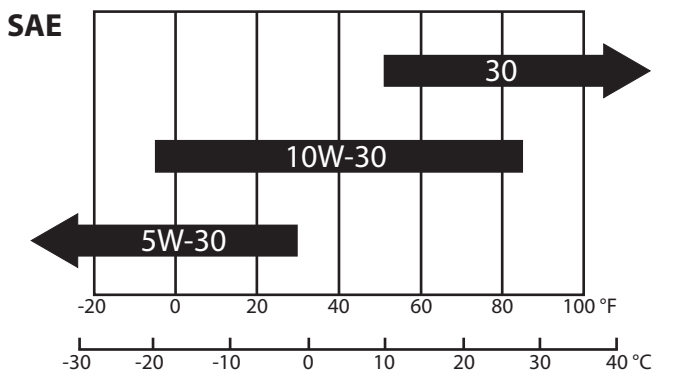


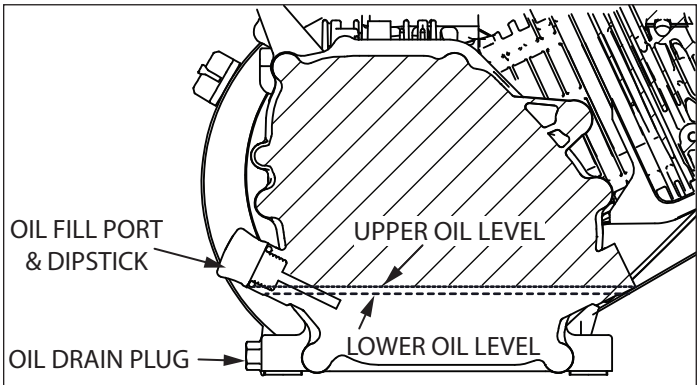


**FIGURE 2**

## ⚠ WARNING

**CARBON MONOXIDE GAS IS TOXIC. MOVE THE ENGINE TO A WELL-VENTILATED AREA OUTDOORS, TO PREVENT CARBON MONOXIDE POISONING. INHALATION CAN CAUSE UNCONSCIOUSNESS AND DEATH.**

**NEVER LEAVE ENGINE RUNNING WHILE UNATTENDED**

**MOVE ENGINE TO A WELL-VENTILATED AREA, ALWAYS OUTDOORS, TO PREVENT CARBON MONOXIDE POISONING.**

**MOVE TO AN AREA AWAY FROM FLAMES OR SPARKS, TO AVOID IGNITION OF VAPORS IF PRESENT.**

### STARTING AND STOPPING THE ENGINE

***Note: Operating engine on a steep angle will cause the engine to lose lubrication and seize.***

Review "safety and warning precautions" and "pre-operation inspection" sections before starting engine.

**Engine Start**

1. Remove all debris from air cleaner holes and cooling fins to ensure proper air flow.
2. Move throttle lever 1/2 way between the **FULL** and **LOW** THROTTLE positions. *(This is not necessary on models with throttle fixed at full throttle position.)* **SEE FIGURE 3**.
3. Move the choke lever as follows:
   - If the engine is cold or the ambient temperature is low, move choke lever to the **FULL CHOKE** position. **SEE FIGURE 4**
   - If the engine is warm or the ambient temperature is high, move choke lever to the **HALF CHOKE** position or **RUN** position. **SEE FIGURES 5 AND 6**

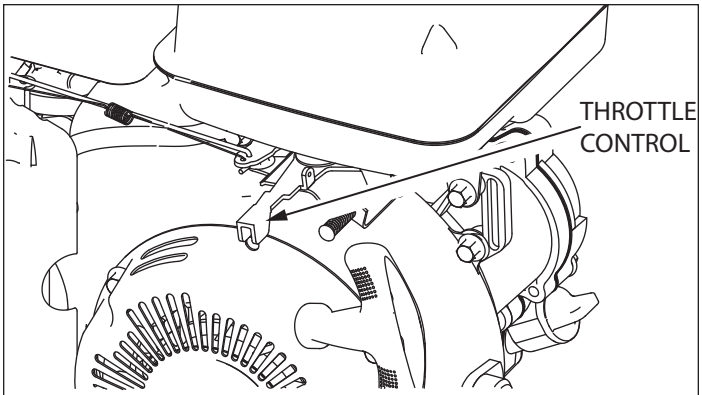

**FIGURE 3**

## ⚠ CAUTION

**DO NOT STOP ENGINE BY MOVING CHOKE CONTROL TO CHOKE. BACKFIRE, ENGINE DAMAGE, OR FIRE MAY OCCUR.**

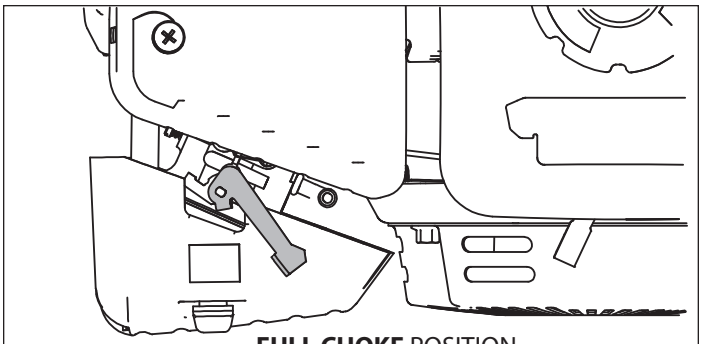
**FULL CHOKE** POSITION
**FIGURE 4**

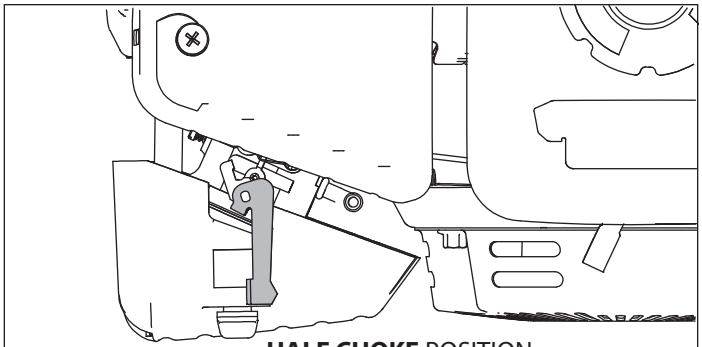
**HALF CHOKE** POSITION
**FIGURE 5**

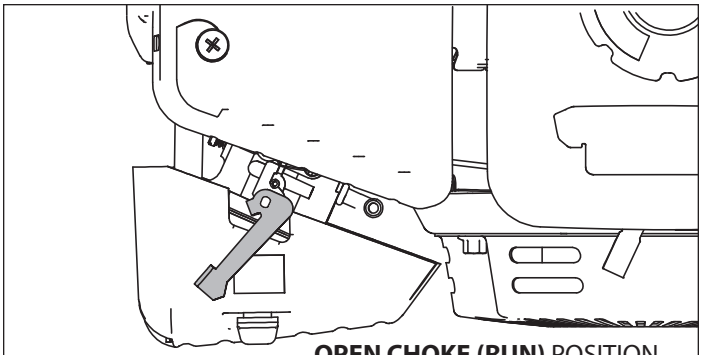
**OPEN CHOKE (RUN)** POSITION
**FIGURE 6**

4. Turn the On/Off switch to the **ON** position. **SEE FIGURE 7**
5. Grasp starter handle and pull out slowly, until resistance is felt. Without letting it retract, pull rope with a rapid stroke. **DO NOT** pull out the rope all of the way. Let it return to its original position very slowly. Repeat this step until engine starts.
6. After engine begins operating, move choke lever to **HALF CHOKE**. **SEE FIGURE 5.**
7. Run engine for 30 to 45 seconds at "Half Choke" position until engine warms up. Then return throttle to operating speed. *(This is not necessary on models with throttle fixed at full throttle position.)*
8. After starting the engine, slowly move the choke lever to the **RUN** position as the engine warms up. Move throttle to desired speed. **SEE FIGURE 3 & 6**

**To Stop the Engine:**

1. Set the throttle lever to the low speed position and allow the engine to run at low speeds for 1-2 minutes before stopping. *(This is not necessary on models with throttle fixed at full throttle position.)*
2. On manual-start models, turn the On/Off switch to the **OFF** position. On models with fixed throttle, move ON/OFF switch to **OFF** position. **SEE FIGURE 8**
3. Pull the starter handle slowly and return the handle to its original position when resistance is felt. This operation will prevent outside moisture from entering the combustion chamber.

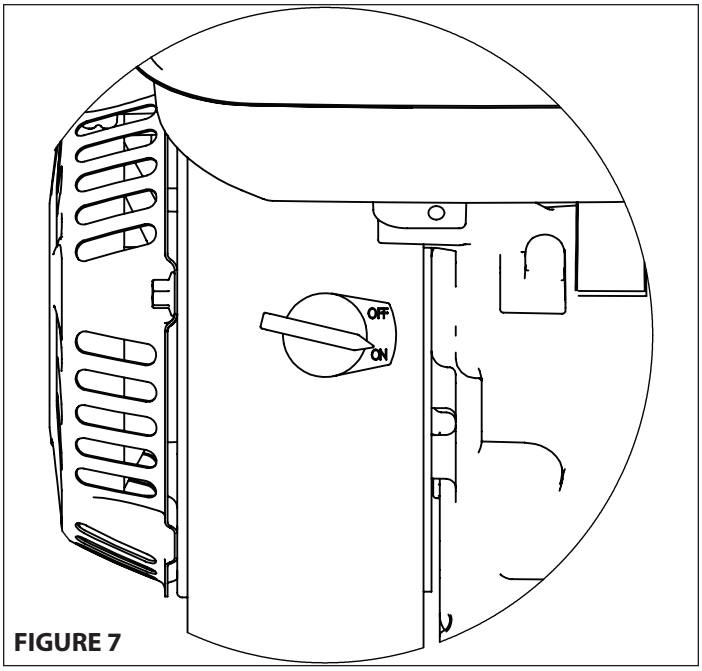

**FIGURE 7**

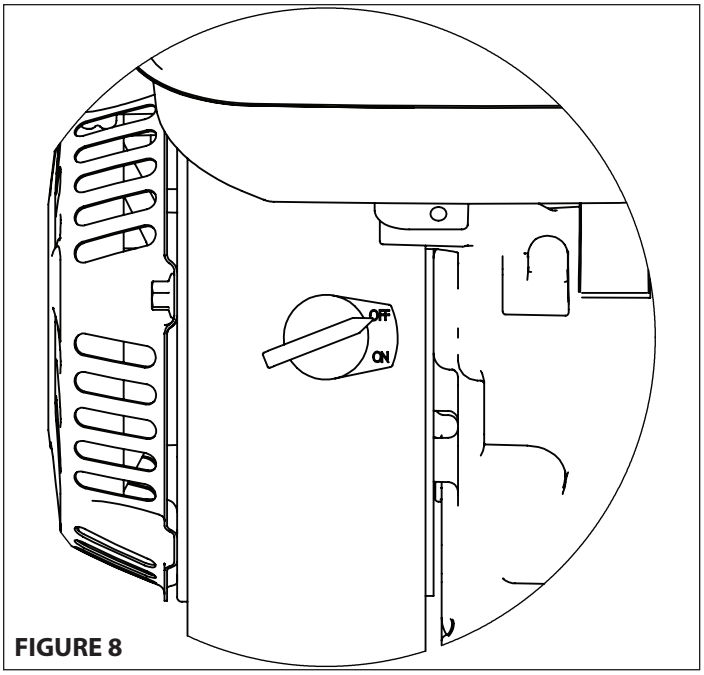

**FIGURE 8**

## MAINTENANCE AND STORAGE

Please read the maintenance schedule, found in the accompanying combined exhaust and evaporative emissions control warranty statment, and observe these recommended care operating intervals to extend the life of your engine.

Good maintenance is essential for safe, economical, and trouble-free operation. It will also help reduce air pollution. To help you properly care for your engine, the following pages include routine inspection procedures and simple maintenance procedures using basic hand tools. Other service tasks that are more difficult, or require special tools, are best handled by professionals and are normally performed by a technician or other qualified mechanic.

**Maintenance, replacement or repair of the emissions control devices and systems may be performed by any non-road engine repair establishment or individuals. However, items must be serviced by an authorized dealer to obtain "no charge" emissions control warranty service.**

### ⚠ WARNING

**IMPROPER MAINTENANCE, OR FAILURE TO CORRECT A PROBLEM BEFORE OPERATION CAN CAUSE A MALFUNCTION. ALWAYS FOLLOW THE INSPECTION AND MAINTENANCE RECOMMENDATIONS AND SCHEDULES IN THIS OPERATOR'S MANUAL.**

**CHECK ENGINE REGULARLY FOR LOOSE NUTS AND BOLTS. KEEP THESE ITEMS TIGHTENED.**

**TEMPERATURE OF MUFFLER AND NEARBY AREAS MAY EXCEED 150° F (65° C). AVOID THESE AREAS.**

**PREVENT ACCIDENTAL STARTING:**

- **ENGINE MUST BE TURNED OFF AND COOL.**
- **SPARK PLUG WIRE MUST BE REMOVED FROM SPARK**

**PLUG BEFORE CHECKING AND ADJUSTING ENGINE OR EQUIPMENT.**

**FAILURE TO FOLLOW THESE WARNINGS CAN RESULT IN SERIOUS INJURY OR DEATH.**

### ⚠ CAUTION

**ENGINE IS SHIPPED FROM FACTORY WITHOUT OIL. YOU MUST ADD ENGINE OIL BEFORE STARTING ENGINE.**

**RUNNING ENGINE WITH A LOW OIL LEVEL WILL CAUSE DAMAGE TO YOUR ENGINE. THIS TYPE OF DAMAGE IS NOT COVERED UNDER WARRANTY.**

### ⚠ WARNING

**NEVER RUN YOUR ENGINE IN A POORLY VENTILATED AREA. THE EXHAUST FROM ENGINE MAY CONTAIN POISONOUS CARBON MONOXIDE. BREATHING IT WOULD CAUSE SHOCK, UNCONSCIOUSNESS, AND EVEN DEATH.**

### ⚠ WARNING

**ENGINE OIL IS HAZARDOUS TO YOUR HEALTH. DISPOSE OF OIL APPROPRIATELY. USE A SAFE DISPOSAL/RECYCLING CENTER.**

## ENGINE MAINTENANCE

For daily maintenance checks, review "pre-operation inspection" section.

### LUBRICATION

Choose 4-cycle engine oil that meets or surpasses the latest API service classification SJ or equivalent as labeled on the oil container. Synthetic oils may be substituted for petroleum-based oils in extreme temperatures. For temperatures higher than 32 ºF, use SAE 30 or SAE 10W-30 motor oil. Use SAE 5W-30 or SAE 10W if temperatures are below 32 ºF. **DO NOT USE SAE 10W-40 MOTOR OIL.**

**Oil Maintenance**

After the first 20 hours, or after the first month of operating a new *Viper®* Engine the oil should be replaced, and every 50 hours of operating time thereafter. The oil should be changed every 25 hours if used under severe conditions, such as in high temperatures or under heavy loads, otherwise changed weekly. Check oil periodically; do not overfill.

**Changing Oil**

Be sure the engine is not operating and is located on a level surface before checking or refilling oil. Engine should be warm for easy removal of oil.

1. Detach spark plug wire and move away from spark plug. If the engine uses a battery, disconnect at negative terminal. **SEE FIGURE 9**
2. Remove oil drain plug and empty oil into suitable oil container. Dispose of oil properly. **SEE FIGURE 10**
3. Reinstall drain plug. Remove dipstick (if applicable) or oil fill cap. **SEE FIGURE 10**
4. Fill with appropriate oil to "FULL" or top line of dipstick; otherwise to top thread of oil fill hole. **SEE FIGURE 10**
5. Reinsert dipstick or oil fill cap and tighten.

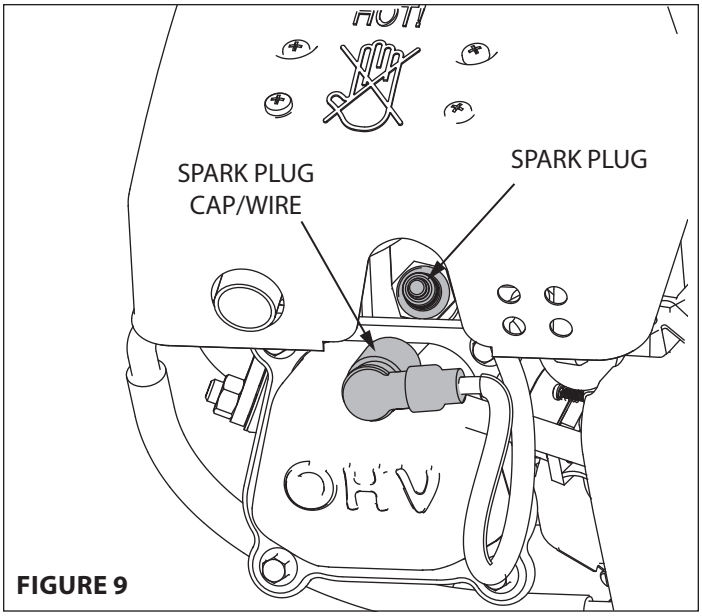

**FIGURE 9**

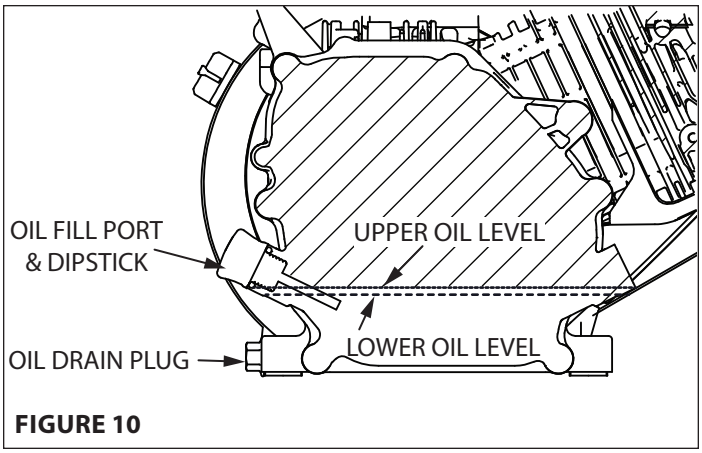

**FIGURE 10**

## ⚠ CAUTION

**NEVER RUN ENGINE WITHOUT AIR FILTER PROPERLY INSTALLED. ADDED WEAR AND ENGINE FAILURE MAY OCCUR IF AIR FILTER IS NOT INSTALLED ON ENGINE.**

### AIR FILTER

Refer to maintenance schedule for suggestions on when to service your air filter. **Clean filter daily in extremely dusty conditions.**

**Remove/Install Air Filter as follows: SEE FIGURE 11**

1. Remove air cleaner cover.
2. Remove the air filter element.
3. Replace with clean or new air filter.
4. Replace air filter cover.

**Washing Air Filter as follows:**

1. Wash in warm water with mild soap until dirt and debris are removed. Press filter when washing, do not twist.
2. Rinse in warm water until soap and dirt are removed.
3. Dry filter by wrapping in a clean cloth and pressing filter until it is dry.
4. Oil filter thoroughly with common household lubricating oil and press out any excess oil.
5. Attach the filter and air cleaner cover to the engine.

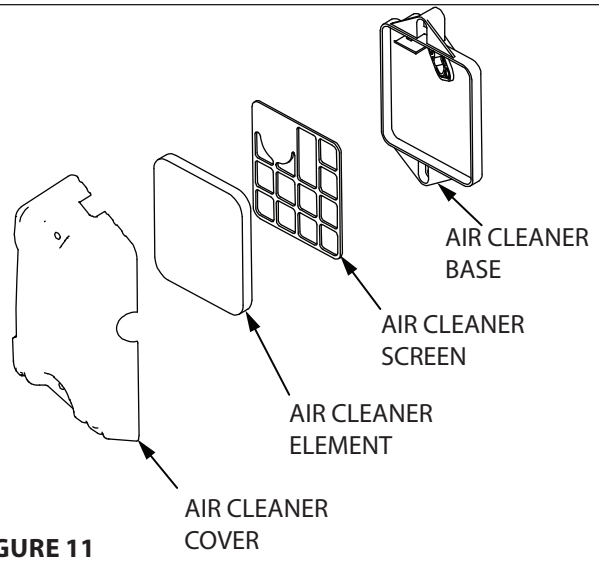


**FIGURE 11**

### SPARK PLUG

The recommended spark plug is a LG E5RTC. The spark plug is located directly under the muffler. **SEE FIGURE 12**

**Checking and Changing Spark Plug**

1. Check spark plug every 50 operating hours.

   ***NOTE: To make the spark plug more accessible, the muffler may be removed.***

2. Disconnect the spark plug cap, and clean any debris from around the spark plug area.
3. Remove spark plug and replace if any of the following occur; pitted electrodes, burned electrodes, cracked porcelain, or deposits around electrodes.
4. After analysis, seat spark plug and tighten with spark plug wrench to compress the sealing washer. **SEE FIGURE 12**

- Reinstall original spark plug, tighten additional 1/2 turn.
- Installing new spark plug, adjust spark plug gap to 0.030" (0.7-0.8 mm) and tighten additional 1/8 – 1/4 turn.

***NOTE: Loose spark plug may overheat and damage engine. Over tightened spark plug may damage threads in the cylinder head.***

**Spark Plug Maintenance**

Spark plug should be removed, cleaned and gap adjusted after approximately fifty hours of operating time.

***NOTE: A sand blaster should not be used to clean spark plugs. Microscopic particles remaining in the plug may score the engine cylinder during operation. Use solvent and a wire brush to clean the plug and compressed air to blow out completely.***

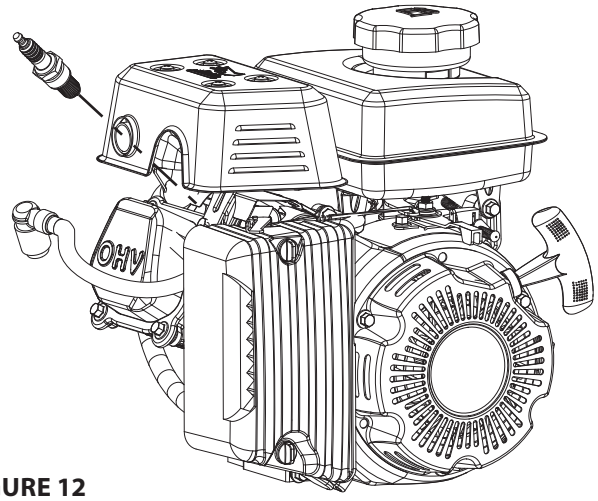


**FIGURE 12**

## ⚠ WARNING

**FUEL IS HIGHLY FLAMMABLE AND MUST BE HANDLED WITH CARE. NEVER FILL OR DRAIN THE FUEL TANK WHEN THE ENGINE IS HOT OR RUNNING. ALWAYS MOVE OUTDOORS TO FILL OR DRAIN FUEL FROM THE TANK. SERIOUS INJURY OR DEATH CAN OCCUR.**

**DO NOT REMOVE FUEL WHILE SMOKING, NEAR OPEN FLAME, OR OTHER POTENTIAL HAZARDS.**

**FUEL IS TOXIC. DO NOT SIPHON FUEL BY MOUTH.**

**DO NOT STORE ENGINE INSIDE A BUILDING WITH FUEL IN THE TANK. POTENTIAL SPARKS MAY BE PRESENT CAUSING IGNITION OF FUEL AND FUEL VAPORS.**

**FAILURE TO FOLLOW SAFETY INSTRUCTIONS CAN CAUSE SERIOUS INJURY OR DEATH.**

**CARBURETOR**

- Never tamper with factory setting of the carburetor.
- Contact Ardisam Customer Service if adjustment is needed.

**FUEL FILTER**

**Clean Or Replace Fuel Filter as follows:**

1. Disconnect spark plug wire from spark plug. Remove spark plug and protect spark plug hole from debris. **SEE FIGURE 12**
2. Drain fuel from tank before attempting to clean/replace filter.
3. Remove two nuts holding muffler to the engine and remove muffler.
4. Remove three bolts holding fuel tank assembly to the engine.
5. Gently lift tank off of the engine and disconnect the hose clamp. **SEE FIGURES 13 and 14**
6. Remove fuel tank filter by using proper size socket to turn filter counter clockwise. **SEE FIGURE 15**
7. Filter may be washed with kerosene or similar solvent.
8. If filter is extremely dirty or torn, replace with new filter.
9. Reassemble and fill with clean fresh gasoline. Check for leaks prior to starting engine.

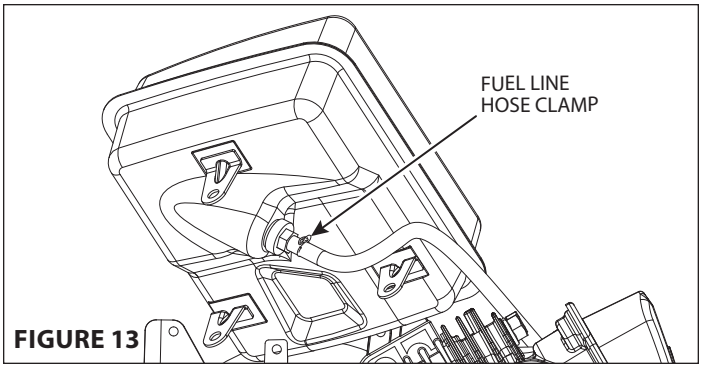

**FIGURE 13**

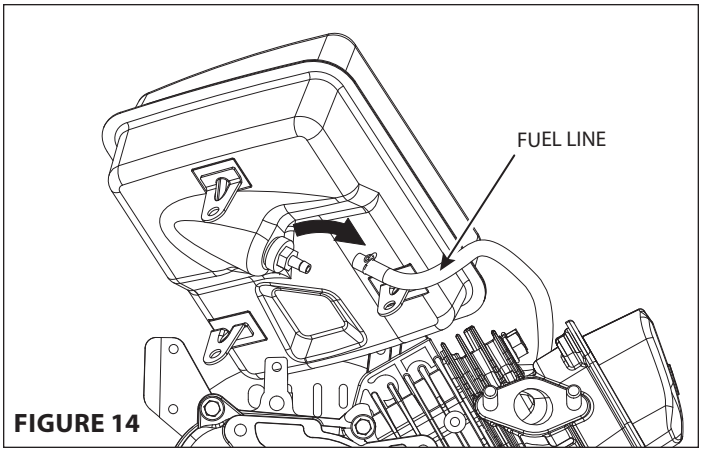

**FIGURE 14**

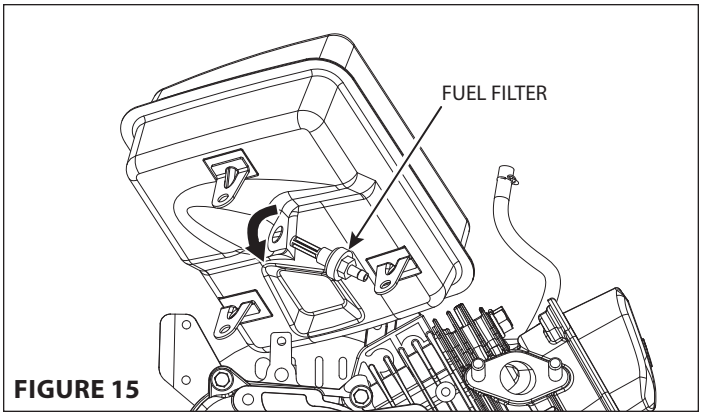

**FIGURE 15**

## ⚠ WARNING

**DO NOT REMOVE FUEL WHILE SMOKING, NEAR OPEN FLAME, OR OTHER POTENTIAL HAZARDS.**

**FUEL IS TOXIC. DO NOT SIPHON FUEL BY MOUTH.**

**DO NOT STORE ENGINE INSIDE A BUILDING WITH FUEL IN THE TANK. POTENTIAL SPARKS MAY BE PRESENT CAUSING IGNITION OF FUEL AND FUEL VAPORS.**

**CHECK ENGINE OFTEN FOR LOOSE NUTS AND BOLTS. KEEP THESE ITEMS TIGHTENED.**

**FAILURE TO FOLLOW SAFETY INSTRUCTIONS CAN CAUSE SERIOUS INJURY OR DEATH.**

## TRANSPORTING ENGINE

1. Never transport engine inside an enclosed space or vehicle. Fuel or fuel vapors may ignite causing serious injury or death.
2. If fuel is present in the fuel tank remove fuel or transport with an open vehicle in an upright position.
3. If an enclosed vehicle must be used, remove fuel into an approved red fuel container. DO NOT siphon by mouth.
4. Run engine or drain to use up the fuel in the carburetor and fuel tank. Always run engine in a well ventilated area.
5. Wipe away any spilled fuel from engine. Allow to dry.

**STEPS FOR LONG-TERM STORAGE**

(30 days or more without use)

1. Mix an appropriate amount of fuel stabilizer to fresh gasoline, in the ratio recommended on the stabilizer packaging. Run the engine for five minutes to distribute the stabilizer mixture throughout the fuel system. This will prevent gum, varnish and corrosion build up in your fuel system during long-term storage for up to 12 months.

   **NOTE: It is recommended that fuel tank is drained and new fuel stabilizer is added every four months. Starting engine once a month to help preserve engine is also recommended.**
2. Store engine in its upright position.
3. Remove all debris from engine.

## TROUBLESHOOTING AND REPAIR

At Ardisam we build quality and durability into the design of our products; but no amount of careful design by us, and careful maintenance by you, can guarantee a repair-free life for your Viper® Engine. Most repairs will be minor, and easily fixed by following the suggestions in the troubleshooting guide in this section.

This section will help you pinpoint the causes of common problems and identify remedies.

For more complicated repairs, you may want to rely on your retailer, an authorized service center, or contact Ardisam customer service. Ardisam will make the necessary repairs if a service center is not available. A parts breakdown is located toward the end of this manual.

We will always be glad to answer any questions you have, or help you find suitable assistance. To order parts or inquire about warranty, call or e-mail us using the contact information found in this section.

**Ordering Replacement Parts**

Parts can be obtained from the store where the unit was purchased or direct from the factory. To order parts visit www.ardisam.com or call 1-800-345-6007. For other general questions, you can email us at: Info@Ardisam.com.

Please include the following information with your order:

1) Part numbers
2) Part description
3) Quantity
4) Model number and serial number

## SPARE PARTS

Only use approved Viper spare parts. Refer to the Illustrated Parts Breakdown and parts list.

**⚠ WARNING**

**IMPROPER MAINTENANCE, OR FAILURE TO CORRECT A PROBLEM BEFORE OPERATION CAN CAUSE A MALFUNCTION. ALWAYS FOLLOW THE INSPECTION AND MAINTENANCE RECOMMENDATIONS AND SCHEDULES INCLUDED WITH THIS OPERATOR'S MANUAL.**

**CHECK ENGINE REGULARLY FOR LOOSE NUTS AND BOLTS. KEEP THESE ITEMS TIGHTENED.**

**TEMPERATURE OF MUFFLER AND NEARBY AREAS MAY EXCEED 150° F (65° C). AVOID THESE AREAS.**

**⚠ WARNING**

**PREVENT ACCIDENTAL STARTING:**

- **ENGINE MUST BE TURNED OFF AND COOL.**
- **SPARK PLUG WIRE MUST BE REMOVED FROM SPARK PLUG BEFORE CHECKING AND ADJUSTING ENGINE OR EQUIPMENT.**

**FAILURE TO FOLLOW THESE WARNINGS CAN RESULT IN SERIOUS INJURY OR DEATH.**

## TROUBLESHOOTING GUIDE

| PROBLEM | POSSIBLE CAUSE | REMEDY/ACTION |
|---|---|---|
| Engine will not start | 1. Power switch off | 1. Flip switch to **ON** position |
| | 2. Spark plug wire disconnected | 2. Connect spark plug wire to spark plug |
| | 3. Out of fuel | 3. Refuel |
| | 4. Spark plug wet, faulty or improperly gapped | 4. Clean, replace or gap spark plug |
| | 5. Stale fuel | 5. Drain old fuel and replace with fresh. Use fuel stabilizer as a future preventative measure. |
| Engine runs rough, floods during operation | 1. Dirty air filter | 1. Clean or replace air filter |
| | 2. Choke partially engaged | 2. Turn off choke |
| | 3. Carburetor out of adjustment | 3. Call Ardisam Customer Service |
| Engine is hard to start | 1. Stale fuel | 1. Drain old fuel and replace with fresh. Use fuel stabilizer as a future preventative measure. |
| | 2. Spark plug wire loose | 2. Make sure spark wire is securely attached to spark plug |
| | 3. Dirty carburetor | 3. Clean carburetor, use fuel stabilizer, and fresh fuel |
| Engine misses or lacks power | 1. Clogged fuel tank or fuel filter | 1. Remove and clean |
| | 2. Clogged air filter | 2. Clean or replace |
| | 3. Improper carburetor adjustment | 3. Call factory |
| | 4. Spark plug dirty, improper gap, or wrong type | 4. Replace spark plug and adjust gap to 0.030" |

Contact Ardisam Customer Service if above remedies fail.

## ILLUSTRATED PARTS BREAKDOWN - Viper 99cc Engine

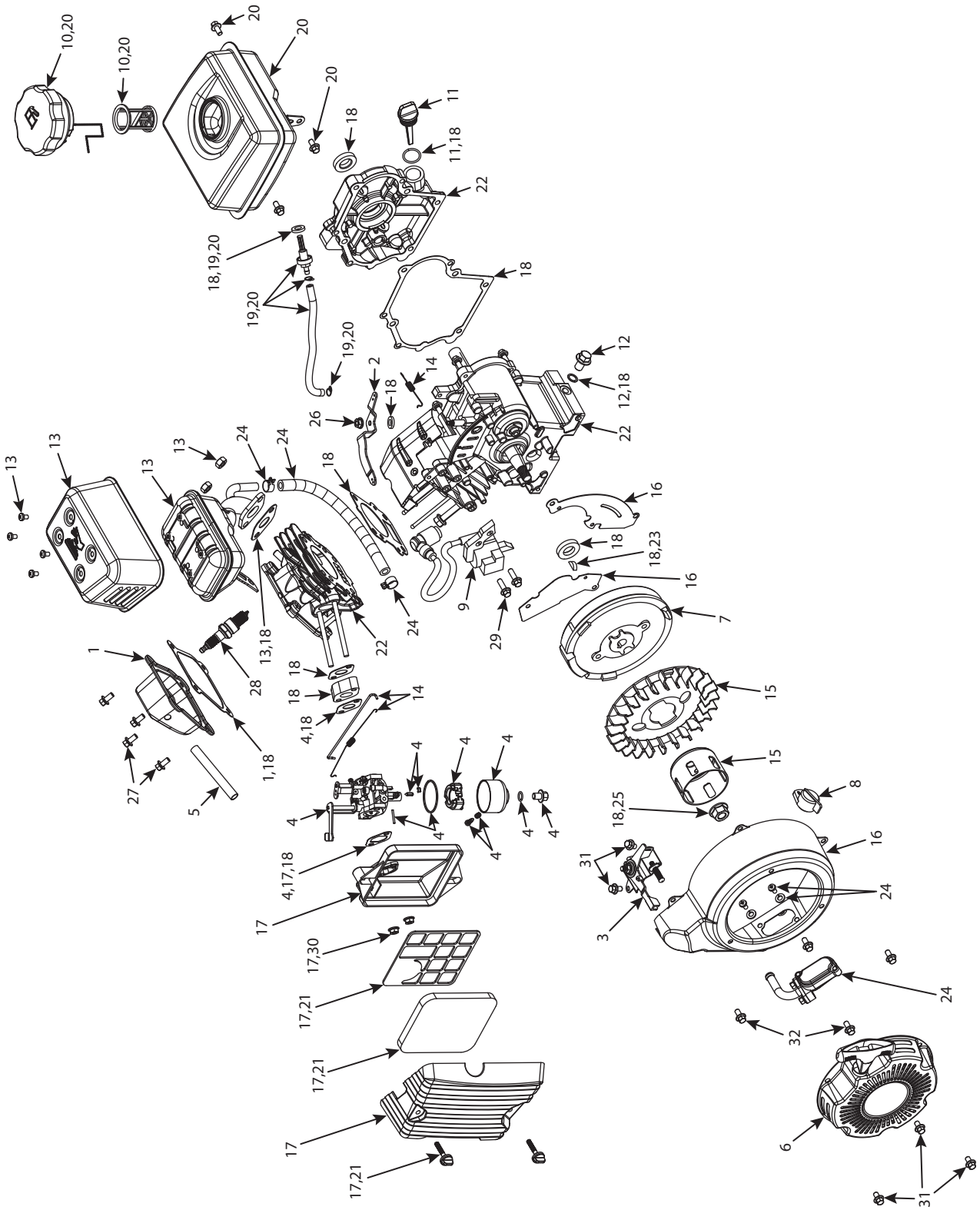

## ILLUSTRATED PARTS BREAKDOWN - Viper 99cc Engine

| REF NO. | PART NO. | DESCRIPTION | QTY. |
|---|---|---|---|
| 1 | 10060 | KIT VALVE COVER | 1 |
| 2 | 10066 | GOVERNOR ARM | 1 |
| 3 | 10067 | THROTTLE CONTROL | 1 |
| 4 | 10078 | KIT CARBURETOR REPLACEMENT | 1 |
| 5 | 10079 | VACUUM BREATHER TUBE | 1 |
| 6 | 10095 | RECOIL ASSEMBLY | 1 |
| 7 | 10099 | FLYWHEEL | 1 |
| 8 | 67069 | ENGINE CUTOFF SWITCH | 1 |
| 9 | 26272 | IGNITION COIL | 1 |
| 10 | 25568 | CAP FUEL TANK CARB | 1 |
| 11 | 10118 | DIPSTICK WITH SEAL | 1 |
| 12 | 10119 | OIL PLUG WITH SEAL WASHER | 1 |
| 13 | 13894 | KIT MUFFLER | 1 |
| 14 | 10146 | KIT THROTTLE CONTROL SPRINGS | 1 |
| 15 | 10147 | KIT STARTER CUP AND BLOWER FAN | 1 |
| 16 | 10148 | KIT BLOWER HOUSING | 1 |
| 17 | 26441 | KIT AIR CLEANER | 1 |
| 18 | 13925 | KIT GASKETS | 1 |
| 19 | 13896 | KIT FUEL LINE | 1 |
| 20 | 26413 | KIT FUEL TANK | 1 |
| 21 | 10236 | KIT REPLACEMENT AIR FILTER ELEMENT | 1 |
| 22 | – | SHORT BLOCK (FOR REFERENCE ONLY) | 1 |
| 23 | 10100 | FLYWHEEL KEY | 1 |
| 24 | 13898 | KIT AUXILIARY AIR INTAKE | 1 |
| 25 | 6274 | NUT M12 X 1.25 HSF GR8.8 ZN | 1 |
| **NON-SERVICED PARTS (For Reference Only)** | | | |
| 26 | – | NUT M6 X 1.0 HHFNYLK | 1 |
| 27 | – | BOLT M6 X 1.0 X 12 (8 HD) HHFCS GR8.8 ZN | 4 |
| 28 | – | SPARK PLUG VIPER 99CC ICES LG E5RTC | 1 |
| 29 | – | BOLT M6 X 20 HHFCS (8 HD) GR8.8 ZN | 2 |
| 30 | – | NUT M6 X 1.0 HSF GR8.8 ZN | 2 |
| 31 | – | BOLT M6 X 1.0 X 8 HHFCS GR8.8 ZN | 5 |
| 32 | – | BOLT M6 X 1.0 X 12 HHFCSW GR8.8 ZN T/T | 7 |
| **NOT SHOWN PARTS** | | | |
| – | 13975 | KIT ALTITUDE 3000 TO 6000 FT | – |
| – | 13976 | KIT ALTITUDE 6000 TO 8000 FT | – |

Viper® Engines, Division of Ardisam, Inc.
1160 8th Avenue, PO Box 666
Cumberland, WI 54829
800-345-6007 | Fax 715-822-2223
E-mail: info@ardisam.com

All weights, specifications and features are approximate and are subject to change without notice. Due to continuous product improvements, product images may not be exact. Items used for props not included. Some assembly may be required.