Operator's Manual

Hang-On Stands

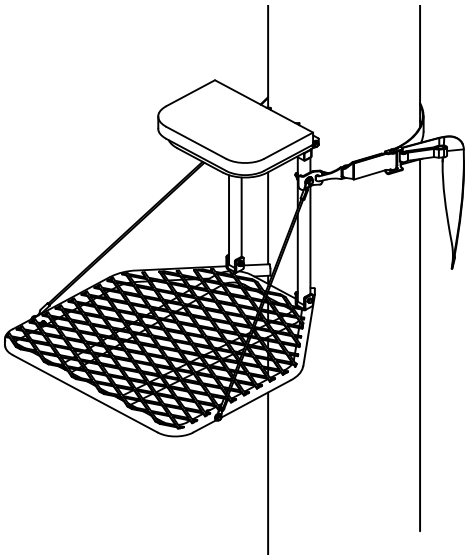

BIG FOOT™
Model RE500

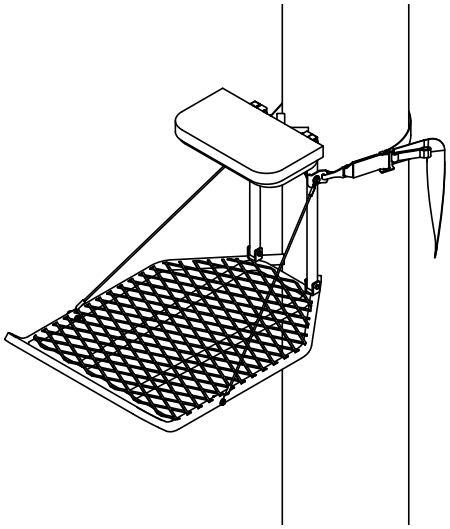

BIG FOOT™ XL with Footrest
Model RE507

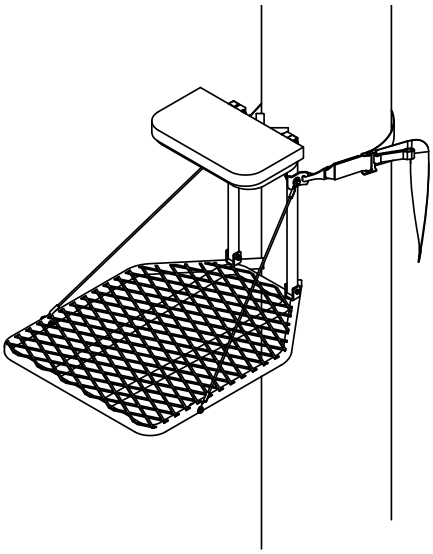

BIG FOOT™ XL
Model RE501

INCLUDES MODEL #'s:

- ☐ RE500, Big Foot™
- ☐ RE504, Baby Big Foot™
- ☐ RE501, Big Foot™ XL
- ☐ RE506, Big Foot™ with Footrest
- ☐ RE507, Big Foot™ XL with Footrest
- ☐ RE503, Lite Foot™
- ☐ RE511, Big Foot™ XL Lounger
- ☐ RE509, Big Foot™ XLT

Certified to TMA Standards by an Independent Testing Laboratory

Get parts online at
www.huntriversedge.com

OMREHO001
Revised 02/23/12
© 2012 RETI, Inc.
All Rights Reserved.

Rivers Edge® Treestands are engineered with you the hunter in mind. We appreciate your purchase of one of our world class treestands. Follow these few simple instructions and your stand will provide you many years of trouble-free pleasure. Instructions should be kept in a safe place and reviewed at least annually.

If for any reason you have a problem with your product, **DO NOT return to the retailer**, contact the Rivers Edge® customer service department at 800-450-EDGE (3343) for assistance.

CONTENTS

Introduction/Warranty 2
Warnings/Safety Information 3-4
Inspection and Maintenance 5
Assembly/Set-Up Instructions/Parts Explosion/Parts List (RE500, RE501, RE503, RE504, RE506, RE507) 6-11
Assembly/Set-Up Instructions/Parts Explosion/Parts List (RE509) 12-15
Assembly/Set-Up Instructions/Parts Explosion/Parts List (RE511) 16-18
Bolt Guide 19

WARRANTY

Rivers Edge® Treestands, Inc., offers a lifetime warranty to be free from defects in materials and workmanship. This warranty applies to the original owner with a proof of purchase. All items attached to our stands (seat, strap, rope, wood, etc.) that are degradable are warranted for a period of one year. There is no warranty on paint. This warranty applies to products that are not modified, abused or misused in a manner that deviates from the products intended usage. Rivers Edge® Treestands offers no other warranty expressed or implied nor is to be held liable for any damage that may result from any defect in a treestand manufactured by them. Warranty work must be sent directly to Rivers Edge® Treestands and performed by them. **To obtain warranty service and/or replacement instructions, you must have prior approval from Rivers Edge® Treestands before shipping your package to us by calling our customer service department at 800-450-EDGE (3343) or by writing to: Rivers Edge® Treestands, Inc., P.O. Box 755, 1160 Eighth Avenue, Cumberland, WI 54829 for a return material authorization number (RMA#).** All items must be shipped prepaid. Rivers Edge® Treestands will at no charge, repair or replace, at their discretion, any defective stand which falls under the conditions stated above. Rivers Edge® Treestands retains the right to change models, specifications and price without notice.

NOTE: You must always use the provided full body harness (fall arrest system) that meets TMA standards while using this product!

This equipment has been manufactured under strict quality guidelines. As with any equipment of this type, full understanding of the instructions and its use is mandatory for the safety of its user. Rivers Edge® Treestands, Inc., is not responsible for any damages or injuries sustained due to improper use or modification of any of its products, or due to any use which deviates from the products intended usage. The manufacturer also is not responsible for any injuries sustained due to failure to adhere to the instructions for use. Any misunderstanding of its operation should be directed to manufacturer prior to its use.

ALL RIVERS EDGE® TREESTANDS COME WITH A FULL BODY HARNESS (FALL ARREST SYSTEM) THAT MEETS TMA STANDARDS. It is the owner's responsibility to inspect the product regularly for damage that could inhibit the ultimate safety of the product. Failure to use or improper use of the provided Full Body Harness (Fall Arrest System) that meets TMA standards may result in serious injury or death. ALWAYS wear the provided Full Body Harness (Fall Arrest System) that meets TMA standards while using this product.

Owner is responsible to check product field rating and must never exceed maximum weight rating stated. Rivers Edge® Treestands, Inc., is not responsible for any malfunction due to normal wear and tear and/or damage caused by improper use, improper maintenance or accidents. This product if used safely as intended, will give you years of trouble free service. We hope you will enjoy the quality of our products for years to come, and have a safe hunt.

For replacement parts, phone 800-450-EDGE (3343) or go online to www.HuntRiversEdge.com.

WARNINGS

⚠ WARNING

DO NOT USE THIS PRODUCT UNTIL YOU HAVE WATCHED THE INCLUDED TREESTAND SAFETY DVD, UNDERSTAND IT, AND PRACTICED THE TECHNIQUES FOR SAFE HUNTING DISCUSSED IN THIS DVD.

YOU MUST ALWAYS USE THE PROVIDED FULL BODY HARNESS (FALL ARREST SYSTEM) THAT MEETS TMA STANDARDS WHILE USING THIS PRODUCT. SINGLE SAFETY BELTS AND CHEST HARNESSES ARE NO LONGER ALLOWED AND SHOULD NEVER BE USED.

IF YOU ARE NOT WEARING A FULL BODY HARNESS PROPERLY ATTACHED TO THE TREE THAT IS PROTECTING YOU FROM A FALL, DO NOT LEAVE THE GROUND.

FAILURE TO USE OR IMPROPER USE OF THE PROVIDED FULL BODY HARNESS (FALL ARREST SYSTEM) THAT MEETS TMA STANDARDS MAY RESULT IN SERIOUS INJURY OR DEATH! READ & UNDERSTAND INSTRUCTIONS ON INSPECTION AND MAINTENANCE SHEET. IF ANY INSTRUCTIONS ARE NOT UNDERSTOOD OR IF YOU HAVE A PARTS ISSUE CALL 800-450-EDGE (3343) BEFORE USING.

READ, UNDERSTAND AND FOLLOW ALL ASSEMBLY, INSPECTION, MAINTENANCE, FULL BODY HARNESS (FALL ARREST SYSTEM) & USE INSTRUCTIONS PROVIDED BEFORE EACH USE. FAILURE TO FOLLOW ALL WARNINGS AND INSTRUCTIONS COULD RESULT IN SERIOUS INJURY OR DEATH.

READ AND PERFORM ALL INSPECTION AND MAINTENANCE TASKS BEFORE EACH AND EVERY USE. (REPLACE ANY QUESTIONABLE COMPONENTS IMMEDIATELY WITH RIVERS EDGE® ORIGINAL REPLACEMENT PARTS.) DO NOT LEAVE YOUR STAND OUTDOORS - REMOVE AFTER EACH USE AND STORE INDOORS!

INSTRUCTIONS/DVD SHOULD BE KEPT IN A SAFE PLACE AND REVIEWED AT LEAST ANNUALLY.

DOUBLE CHECK ASSEMBLY STEPS TO BE CERTAIN YOU HAVE CORRECTLY ASSEMBLED THIS PRODUCT.

DO NOT CRUSH TUBING WHEN TIGHTENING BOLT ASSEMBLIES! IDENTIFY AND FAMILIARIZE YOURSELF WITH ALL PARTS BEFORE YOU START. A BOLT IDENTIFICATION CHART CAN BE FOUND IN THE BACK.

DO NOT EXCEED THE TOTAL FIELD RATING - 300 LBS.

NEVER USE ANY PRODUCT THAT HAS NOT BEEN MAINTAINED OR INSPECTED PROPERLY - YOUR LIFE DEPENDS ON IT!

WHEN HUNTING FROM A TREESTAND, FALLS CAN OCCUR ANY TIME AFTER LEAVING THE GROUND CAUSING INJURY OR DEATH.

⚠ WARNING

NEVER ATTACH TO A DEAD, ODD-SHAPED, LEANING, DISEASED, LOOSE-BARKED TREE OR UTILITY POLES.

REPLACE ANY AND ALL TREESTAND STRAPS EVERY TWO YEARS OR WHEN ANY SIGNS OF DAMAGE OR WEAR EXIST BEFORE.

SOME MODELS INCLUDE A FOOTREST, WHICH IS DESIGNED AS A FOOTREST ONLY. NEVER STAND ON FOOTREST!

BE SURE TO RAISE AND LOWER YOUR WEAPON WITH A HAUL LINE. GUN BARREL END OR ARROW TIPS MUST BE POINTED DOWN-AWAY FROM YOU.

BE SURE SEAT PAD AND/OR BUCKLES ARE SECURELY AND CORRECTLY ATTACHED TO PREVENT ACCIDENTAL REMOVAL

STUDY YOUR NEW STAND TO BECOME FAMILIAR WITH ALL OF ITS FEATURES AND DESIGN. AT GROUND LEVEL, BEFORE ATTACHING OVERHEAD AND WHILE FOLLOWING PROVIDED USE INSTRUCTIONS, PRACTICE ATTACHING STAND TO TREE, REMOVING STAND FROM TREE, SITTING, AND STANDING.

INSTALLING AND USING THE TREESTAND AT GROUND LEVEL BEFORE ATTEMPTING AT ALTITUDE WILL CONFIRM THAT THE PRODUCT IS MANUFACTURED, ASSEMBLED, AND INSTALLED CORRECTLY. FAILURE TO INSTALL AND TEST AT GROUND LEVEL FIRST PUTS USERS AT RISK FOR SERIOUS INJURY OR DEATH.

DO NOT USE ANY TYPE OF AFTER MARKET HANGING ASSISTS, BRACKET MOUNT SYSTEMS OR ANY OTHER TYPE OF MECHANISM TO ATTACH YOUR RIVERS EDGE® HANG-ON TREESTAND TO A TREE. THESE TYPES OF DEVICES CAN NEGATIVELY AFFECT THE STABILITY OF THE TREESTAND IN THE TREE AND REDUCE OR PREVENT PROPER TIGHTENING, TREE ADHESION AND PERFORMANCE OF THE TREESTAND TO THE TREE WHICH CAN LEAD TO SERIOUS INJURY OR DEATH.

⚠ WARNING

THE USE OF A LINEMAN'S/CLIMBING BELT IS REQUIRED WHILE ASCENDING, DESCENDING AND INSTALLING A HANG-ON TREESTAND TO STABILIZE THE USER WITH THE TREE.

CLIMBING AIDS (STICK LADDERS, SECTIONAL LADDERS, STEPS, ETC.) MUST EXTEND ABOVE THE PLATFORM TO ALLOW THE USER TO STEP DOWN ONTO THE PLATFORM. NEVER STEP UP TO YOUR STAND FROM A CLIMBING AID.

CORRECT TIGHTENING AND ADJUSTMENTS OF CHAINS, CABLES, STRAPS, ETC. ARE CRITICAL TO STABLE HANG-ON TREESTAND INSTALLATION. ALL TREESTAND CONTACT POINTS MUST BE IN CONTACT WITH THE TREE BEFORE YOU STEP ONTO YOUR STAND.

PLATFORM MUST BE FOLDED UP TO REMOVE STAND! THIS ALLOWS SLACK IN STRAP FOR REMOVAL.

ALWAYS CLIMB TREE ON THE ATTACHMENT SIDE OF THIS TREESTAND. VISUALLY INSPECT YOUR CONNECTION TO BE ASSURED YOU HAVE CORRECTLY ATTACHED STAND TO TREE AS PER INSTRUCTIONS AND DIAGRAMS.

NEVER PULL YOURSELF UP ONTO PLATFORM - ALWAYS STEP DOWN FROM ABOVE.

NEVER TOUCH OR MOVE BUCKLE WHILE STAND IS IN USE.

USE A HAUL LINE TO RAISE OR LOWER THE TREESTAND. NEVER CLIMB WITH ANYTHING ON YOUR BACK.

NEVER LEAVE A TREESTAND IN A TREE WHEN NOT IN USE SINCE WEATHER OR ANIMALS COULD CAUSE DAMAGE. TREE GROWTH CAN ALSO STRESS AND DAMAGE STRAPS AND BUCKLES.

ALWAYS...

- Be physically fit, mentally alert, and well rested before using this product
- Read, understand and follow all warnings and instructions before use, save for future reference
- Use the provided Full Body Harness (Fall Arrest System) that meets TMA standards at all times including ascending to and descending from a tree stand
- Be fully aware of foot placement
- Recommended for adult use only
- Inspect for missing parts, all hardware condition, and damage before every application, replace if necessary
- Pull up a bow, backpack, firearm or other equipment only after being secure in the treestand and a firearm must be pulled up with it unloaded, chamber open and muzzle down.
- Remove after every use, store product indoors.
- Use only Rivers Edge® original replacement parts.
- Lubricate all slide together points with powder graphite to prevent binding, wear, rust and noise.
- Avoid all electrical power lines.
- Inform someone of the hunting location, where the treestand will be located and the expected duration of the hunt.
- Carry a signal device such as a mobile phone, radio, whistle, signal flare or personal locator device (PLD) and it must be readily available at all times.
- Inspect the treestand and all safety devices each time before use and do not store a treestand outdoors when not in use.

NEVER...

- Sleep in a treestand
- Exceed the total field rating of 300 lbs.
- Attach to a dead, odd-shaped, leaning, diseased, loose barked trees or utility poles.
- Exceed maximum recommended use height of 10' while using a 15' climbing aid (climbing stick)
- Exceed maximum recommended use height of 15' while using a 20' climbing aid (climbing stick)
- Use on trees with a diameter smaller than 8 inches or larger than 20 inches.
- Use a treestand during inclement weather such as rain, lightning, windstorms or icy conditions and end your hunt and return to the ground if inclement conditions arise.
- Carry gun or bow when ascending or descending
- Alter the original design of your stand.
- Jump on or use in a careless manner.
- Lean out over edge of device.
- Use when intoxicated or using over-the-counter medication or prescription drugs.
- Use a damaged product, replace with new.
- Loan your stand to someone else.
- Stand on the seat, it is designed for sitting only.
- Use a treestand when feeling ill, nauseous or dizzy., or if you have a prior medical condition that could cause a problem (i.e. heart condition, joints that lock up, spinal fusions, etc.) or if you are not well rested.
- Rely on a tree branch for support.
- Jump or bounce on a treestand to seat it to the tree.

INSPECTION AND MAINTENANCE SCHEDULE

FOR ALL RIVERS EDGE® PRODUCTS

- Inspect all webbing, rope, cord, and strap assemblies for wear or damage.
- Inspect cables and cable ends for damage or kinking.
- Inspect all hardware and chain components for damage.
- Inspect for any structural damage to product. (Return to factory for repair or discard product if any damage is found.)
- Inspect all nut and bolt assemblies to be certain none are loose.
- Inspect for any missing parts.
- Lubricate all pivot and slide together points with powder graphite to prevent noise, wear, and rust.
- Inspect entire product for any rust, corrosion, cracks, freezing, excessive heat or rotting damage that may effect the safety of your product. Discard any questionable product.
- Inspect entire product for any structural damage - pay close attention to all weld locations. (Return to factory for repair or discard product if any damage is found.)
- Using correct wrenches inspect all nut & bolt assembly locations and snug up any that may be loose. Be careful not to crush tubing when tightening!
- Inspect and check operation of all cables, cable ends, cord, rope, webbing, and strap or chain assemblies. Replace with factory new any item or assembly that shows signs of wear, damage, kinking, or functions incorrectly.
- Inspect seat. Replace any seat with factory new that shows signs of structural damage or wear.
- Inspect all hardware for wear or damage, also be sure you have no missing parts.
- Never modify your stand in any way by making repairs, replacing parts, or altering adding or attaching anything to it except if explicitly authorized in writing by the manufacturer.

ASSEMBLY INSTRUCTIONS (RE504, RE500, RE501, RE503, RE506, RE507)

Tools needed – two 7/16" wrenches

IMPORTANT ASSEMBLY TIP: ***Do not tighten any nut and bolt combinations completely until all parts are assembled together! Finger tighten plus one turn of a wrench only! This will temporarily hold the lock nut on the bolt while helping alignment of all parts! After all parts are assembled together, all nut & bolt combinations must be completely tightened.***

1. Bolt the metal seat frame (C30) or (C33) onto the seat post using the (2) provided 1/4-20 x 2-1/4" bolts, locknuts and (6) nylon washers. **SEE FIGURES 1A OR 1B. DO NOT tighten all nut & bolt assemblies completely!**
2. Attach removable seat cushion to metal seat frame by sliding seat frame into pocket. Wrap the Velcro seat straps or buckle straps around seat frame and secure together. Snap the side release buckle together for buckle style seats. Pull straps tight so seat is not loose.
3. Bolt cables onto platform using the (2) provided 1/4 x 1-1/2" bolts, locknuts and steel washers. **SEE FIGURE 2. You must now tighten all nut & bolt assemblies. Be sure not to over tighten or crush tubing when tightening!**

   NOTE: Using powder graphite lubricant during assembly of moving parts will help eliminate noise during use!
4. Attach backpacking straps (48067) at desired location on platform. Fold strap in half. Feed folded strap through platform mesh. Feed the two loose ends of strap through folded loop and pull tight forming a cinch knot. **SEE FIGURES 3A AND 3B.** Feed straps through platform mesh and secure with provided tri-slide buckles. **SEE FIGURES 3C.**

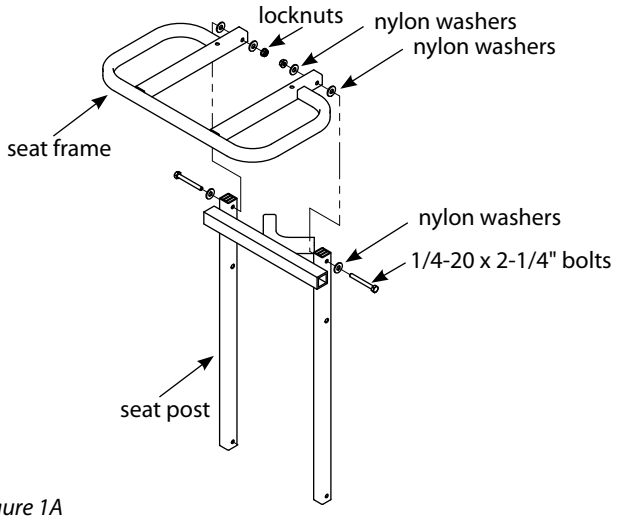

Figure 1A

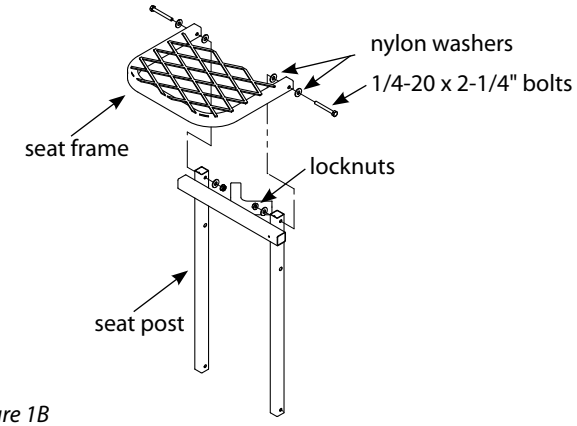

Figure 1B

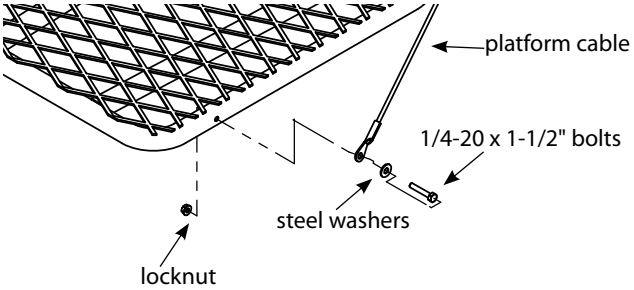

Figure 2

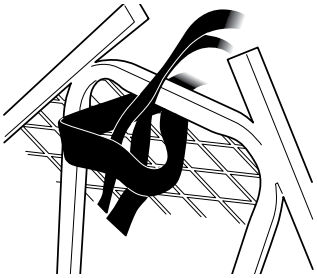

Figure 3A

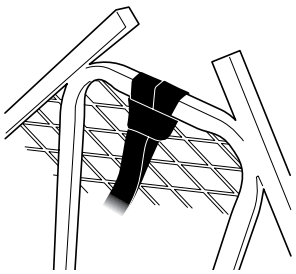

Figure 3B

Figure 3C

SETUP AND USE INSTRUCTIONS (RE504, RE500, RE501, RE503, RE506, RE507)

During installation and removal of a hang-on treestand, you must always and properly use the included Full Body Harness (Fall Arrest System) with climbing belt. Refer to the Full Body Harness and climbing belt instructions included with this product for proper use. You must always use the Full Body Harness while using this product.

1. At desired height, attach by following instructions - a,b,c,d,e.

   NOTE: Stand should be attached to tree with platform folded in an upright position!

   a. Lengthen strap by pulling buckle away from strap - this will allow strap to slide around buckle roller.

   b. Take buckle and wrap around tree. Be sure the strap is even and at the same level all the way around the tree. Also, be sure there are no twists in the strap. Connect hook to opposite side of stand by inserting thru hole (slot) provided. **SEE FIGURE 4.**

   c. Pull on excess end of strap firmly - snugging up stand to tree. **SEE FIGURES 4 AND 5.**

   NOTE: Platform must be folded up while doing this.

   d. Once securely attached, pull stand platform down. This lever-action will snug stand up tight to tree to prevent any shifting. Redo as necessary to accomplish a snug stand-to-tree fit. All four contact bars must be touching tree! **SEE FIGURE 5.**

   e. The tension on strap will not allow any slippage due to roller bar tension of buckle. Proper installation should be checked prior to stepping onto platform to ensure safety. **SEE FIGURE 5.**

2. Before stepping down onto center of stand platform, be sure it is secured properly and is tight against tree with all (4) contact bars touching tree!
3. Carefully step onto stand platform to be sure you have a solid feel against tree and platform is level. Seat folds down for sitting and tips back for standing.

NOTE: To remove stand, fold platform back up and pull on buckle hand strap.

NOTE: On all stands, paint gets between expanded grating and frame of platform. To eliminate any creaking sound from this, walk all over platform before use in woods. This will eliminate any temporary creaking sound.

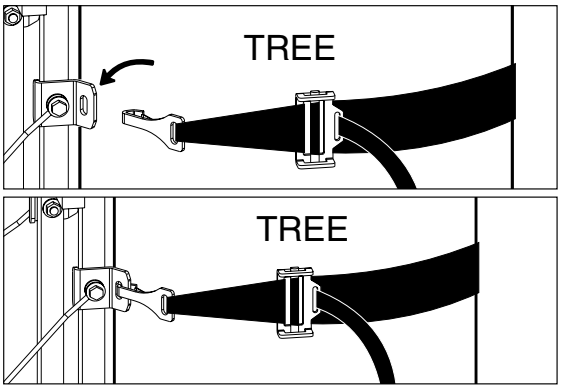

Figure 4

⚠ WARNING

DO NOT TWIST STRAP WHEN ATTACHING. SEE FIGURE 4 FOR CORRECT ATTACHMENT.

DOUBLE CHECK ASSEMBLY STEPS TO BE CERTAIN YOU HAVE CORRECTLY ASSEMBLED THIS PRODUCT.

STUDY YOUR NEW STAND TO BECOME FAMILIAR WITH ALL OF ITS FEATURES AND DESIGN. AT GROUND LEVEL, BEFORE ATTACHING OVERHEAD AND WHILE FOLLOWING PROVIDED USE INSTRUCTIONS, PRACTICE ATTACHING STAND TO TREE, REMOVING STAND FROM TREE, SITTING, AND STANDING.

INSTALLING AND USING THE TREESTAND AT GROUND LEVEL BEFORE ATTEMPTING AT ALTITUDE WILL CONFIRM THAT THE PRODUCT IS MANUFACTURED, ASSEMBLED, AND INSTALLED CORRECTLY. FAILURE TO INSTALL AND TEST AT GROUND LEVEL FIRST PUTS USERS AT RISK FOR SERIOUS INJURY OR DEATH.

ALWAYS CLIMB TREE ON THE ATTACHMENT SIDE OF THIS TREESTAND. VISUALLY INSPECT YOUR CONNECTION TO BE ASSURED YOU HAVE CORRECTLY ATTACHED STAND TO TREE AS PER INSTRUCTIONS AND DIAGRAMS.

THE USE OF A LINEMAN'S/CLIMBING BELT IS REQUIRED WHILE ASCENDING, DESCENDING AND INSTALLING A HANG-ON TREESTAND TO STABILIZE THE USER WITH THE TREE.

CORRECT TIGHTENING AND ADJUSTMENTS OF CHAINS, CABLES, STRAPS, ETC. ARE CRITICAL TO STABLE HANG-ON TREESTAND INSTALLATION. ALL TREESTAND CONTACT POINTS MUST BE IN CONTACT WITH THE TREE BEFORE YOU STEP ONTO YOUR STAND.

PLATFORM MUST BE FOLDED UP TO REMOVE STAND! THIS ALLOWS SLACK IN STRAP FOR REMOVAL.

NEVER PULL YOURSELF UP ONTO PLATFORM - ALWAYS STEP DOWN FROM ABOVE.

NEVER TOUCH OR MOVE BUCKLE WHILE STAND IS IN USE.

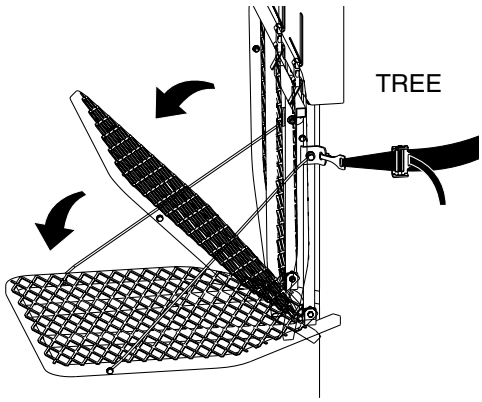

Figure 5

BABY BIG FOOT (RE504)

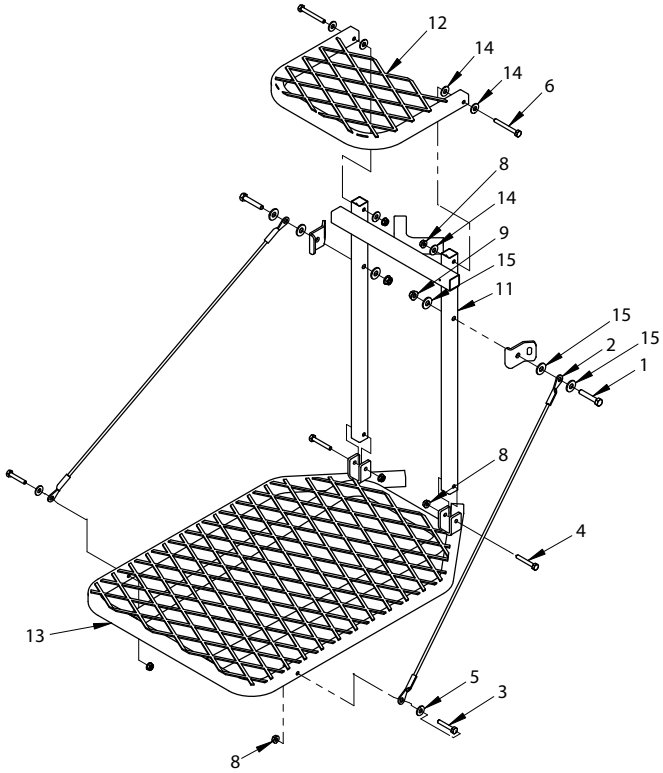

BIG FOOT (RE500)

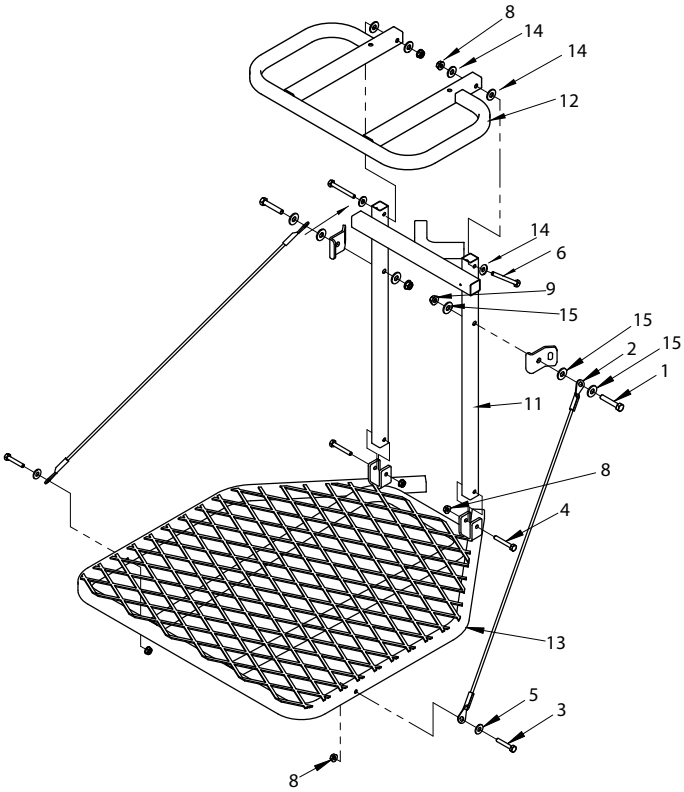

BIG FOOT XL (RE501)

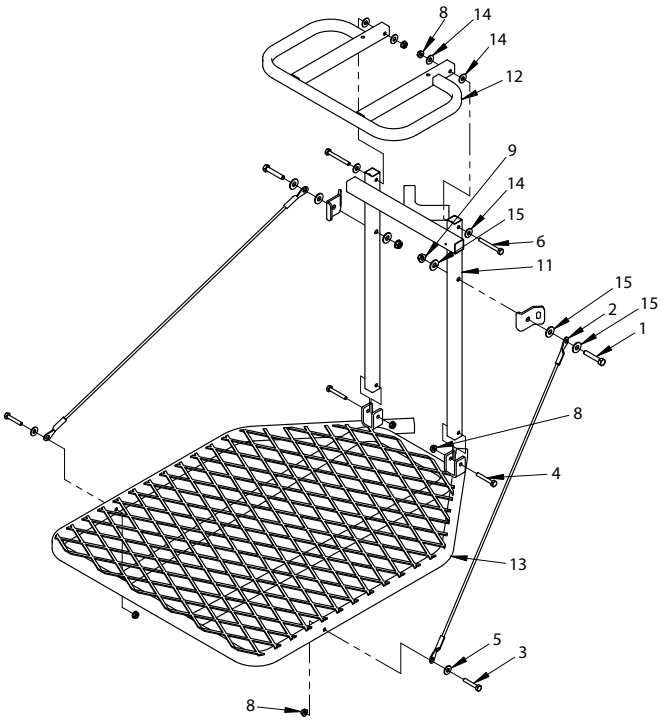

LITE FOOT (RE503)

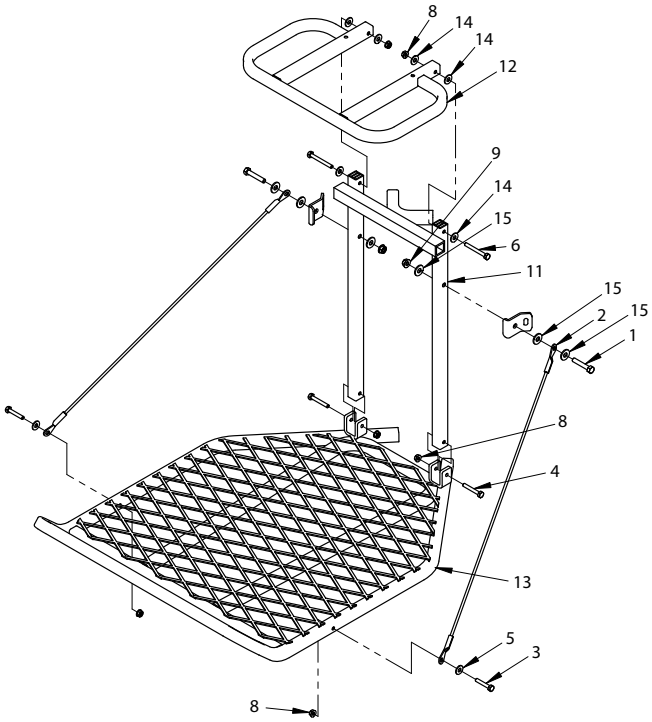

KEY #	DESCRIPTION	RE504 PART #	QTY.	RE500 PART #	QTY.	RE501 PART #	QTY.	RE503 PART #	QTY.
1	BOLT 5/16-18 X 1-3/4" HH BLK ZN	8655B	2	8655B	2	8655B	2	8655B	2
2	CABLE 26" BLACK VINYL W/BLACK ENDS	48210	2	48210	2	--	-	48210	2
2	CABLE 28" BROWN VINYL W/BLACK ENDS	--	-	--	-	48212	2	--	-
3	BOLT 1/4-20 X 1-1/2" HH BLK ZN	48240B	2	48240B	2	48240B	2	48240B	2
4	BOLT 1/4-20 X 1-3/4" HH BLK ZN	48250B	2	48250B	2	48250B	2	48250B	2
5	WASHER 1/4" FLAT BLK ZN	48261B	2	48261B	2	48261B	2	48261B	2
6	BOLT 1/4-20 X 2-1/4" HH BLK ZN	48271B	2	48271B	2	48271B	2	48271B	2
8	NUT 1/4-20 FLANGE NYLOCK BLK ZN	48752B	6	48752B	6	48752B	6	48752B	6
9	NUT 5/16-18 FLANGE NYLOCK BLK ZN	60G5NYB	2	60G5NYB	2	60G5NYB	2	60G5NYB	2
11	SEAT POST	C19	1	C19	1	C19	1	ALC19	1
12	SEAT FRAME	C33	1	C30	1	C30	1	C30	1
13	PLATFORM	CB18	1	C18	1	CX18	1	ALC26	1
14	WASHER 5/16" NYLON, BLK	WN516	6	WN516	6	WN516	6	WN516	6
15	WASHER 5/16" FLAT BLK ZN	WF516B	6	WF516B	6	WF516B	6	WF516B	6
ITEMS BELOW NOT SHOWN									
--	TREE STRAP ASSEMBLY	RE760	1	RE760	1	RE760	1	RE760	1
--	FULL BODY HARNESS (FAS)	48155	1	48155	1	48155	1	48155	1
--	CLIMBING BELT	48665	1	48665	1	48665	1	48665	1
--	BACKPACK STRAPS / TRI-SLIDE KIT	48067	1	48067	1	48067	1	48067	1
--	SEAT COVER, SEWN COMPLETE W/FOAM	48101	1	486103	1	486103	1	486103	1
--	DVD TREESTAND SAFETY	48800	1	48800	1	48800	1	48800	1

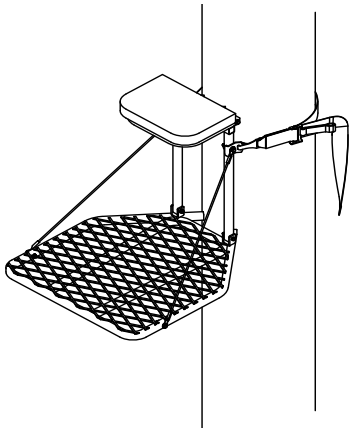

BIG FOOT™
Model RE500

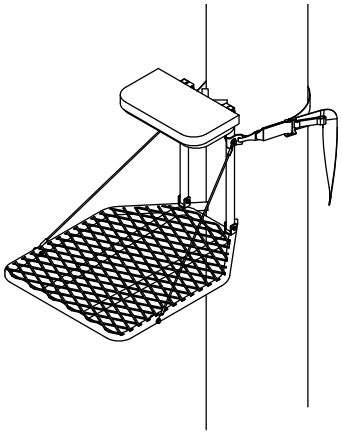

BIG FOOT™ XL
Model RE501

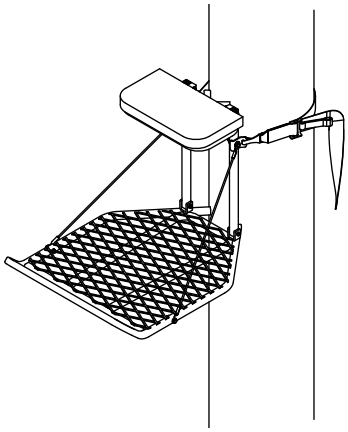

LITE FOOT™
Model RE503

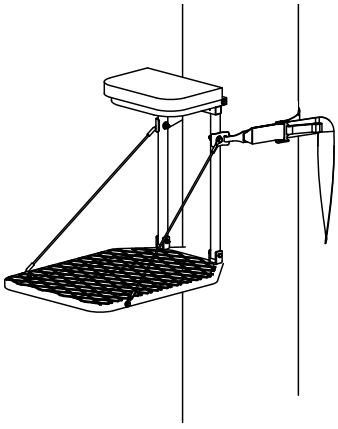

BABY BIG FOOT™
Model RE504

FIXED POSITION HANG-ON PARTS (RE507, BIG FOOT XL WITH FOOTREST)

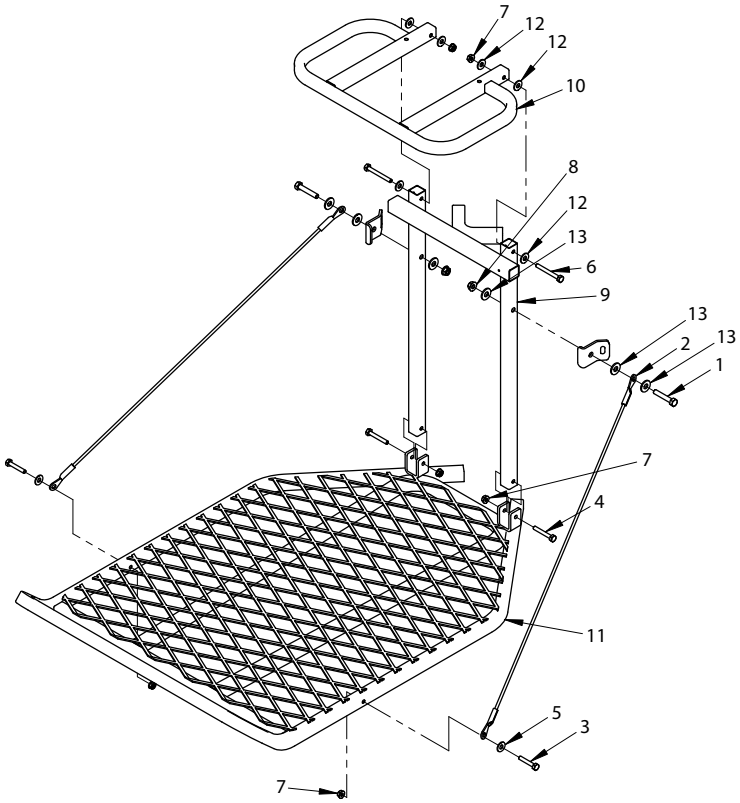

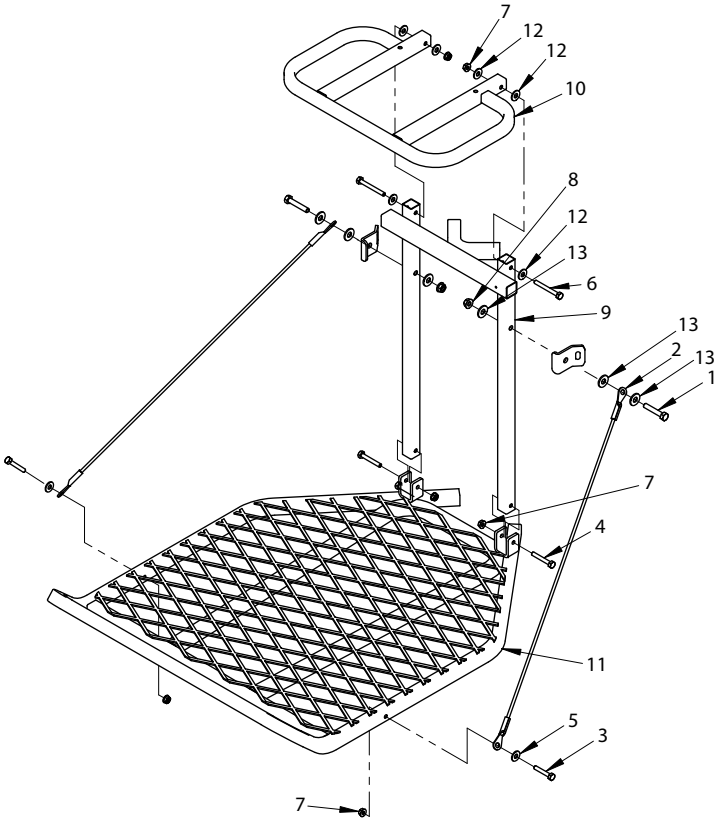

FIXED POSITION HANG-ON PARTS (RE506, BIG FOOT WITH FOOTREST)

FIXED POSITION HANG-ON PARTS LIST (RE506/RE507)

KEY #	DESCRIPTION	RE507 PART #	QTY	RE506 PART #	QTY
1	BOLT 5/16-18 X 1-3/4" HH BLK ZN	8655B	2	8655B	2
2	CABLE 28" BROWN VINYL W/BLACK ENDS	48212	2	--	--
2	CABLE 26" BLACK VINYL W/BLACK ENDS	--	--	48210	2
3	BOLT 1/4-20 X 1-1/2" HH BLK ZN	48240B	2	48240B	2
4	BOLT 1/4-20 X 1-3/4" HH BLK ZN	48250B	2	48250B	2
5	WASHER 1/4" FLAT BLK ZN	48261B	2	48261B	2
6	BOLT 1/4-20 X 2-1/4" HH BLK ZN	48271B	2	48271B	2
7	NUT 1/4-20 FLANGE NYLOCK BLK ZN	48752B	6	48752B	6
8	NUT 5/16-18 FLANGE NYLOCK BLK ZN	60G5NYB	2	60G5NYB	2
9	SEAT POST	C19	1	C19	1
10	SEAT FRAME	C30	1	C30	1
11	PLATFORM	CXR18	1	CR18	1
12	WASHER 5/16" NYLON, BLK	WN516	6	WN516	6
13	WASHER 5/16" FLAT BLK ZN	WF516B	6	WF516B	6
ITEMS BELOW NOT SHOWN					
--	TREE STRAP ASSEMBLY	RE760	1	RE760	1
--	FULL BODY HARNESS (FAS)	48155	1	48155	1
--	CLIMBING BELT	48665	1	48665	1
--	BACKPACK STRAPS / TRI-SLIDE KIT	48067	1	48067	1
--	SEAT, PADDED	486103	1	486103	1
--	DVD TREESTAND SAFETY	48800	1	48800	1

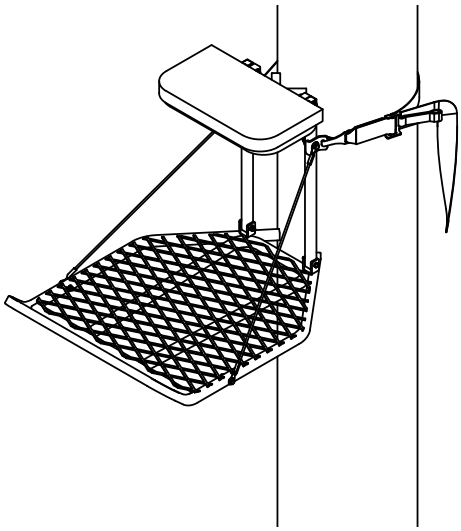

BIG FOOT™ with Footrest
Model RE506

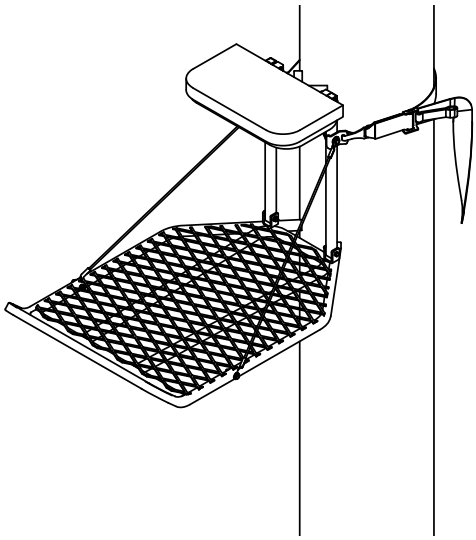

BIG FOOT™ XL with Footrest
Model RE507

ASSEMBLY INSTRUCTIONS (RE509)

Tools needed – two 7/16" wrenches

IMPORTANT ASSEMBLY TIP: ***Do not tighten any nut and bolt combinations completely until all parts are assembled together! Finger tighten plus one turn of a wrench only! This will temporarily hold the lock nut on the bolt while helping alignment of all parts! After all parts are assembled together, all nut & bolt combinations must be completely tightened.***

1. Bolt the metal seat frame (C30) onto the seat post (CXR25) using the (2) provided 1/4-20 x 2-1/2" bolts, locknuts and (6) nylon washers. **SEE FIGURE 1. DO NOT tighten all nut & bolt assemblies completely!**
2. Attach the tree hugger to the seat post using (1) provided 5/16-18 x 2" bolt, locknut and steel washer. **SEE FIGURE 1.**
3. Bolt cables (48212) onto platform (CXR21) using the (2) provided 1/4-20 x 1-1/2" bolts, locknuts and steel washers. **SEE FIGURE 2. You must now tighten all nut & bolt assemblies. Be sure not to over tighten or crush tubing when tightening!**

   NOTE: ***Using powder graphite lubricant during assembly of moving parts will help eliminate noise during use!***
4. Insert the removable/pivoting armrests (CXR26) into each armrest receiver on the seat post by pressing snap button inward and snapping button into holes of receivers. **SEE FIGURE 3.** Thread bolt knob into treaded portion of receiver to tighten up armrest to help prevent movement/noise.

   Armrests can be inserted into receivers and positioned all four directions if desired. Armrests can also be removed if desired. Repositioning of armrest will allow for easier entry/exit into your treestand and can make for a slimmer profile for backpacking.

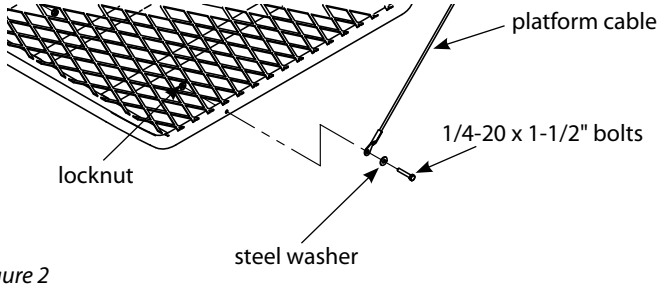

Figure 2

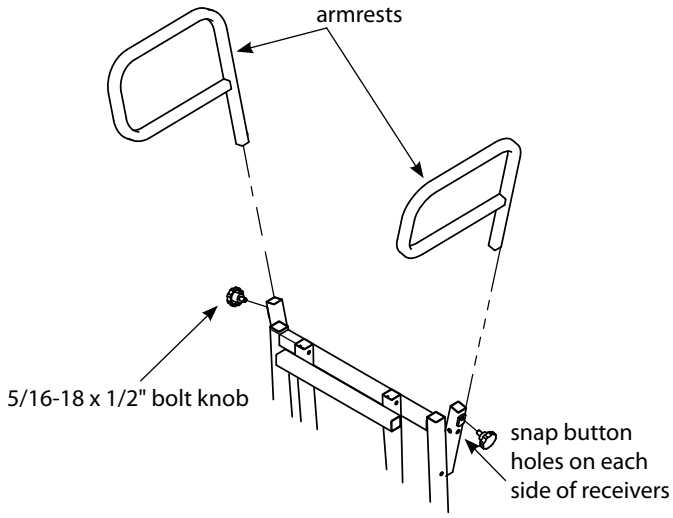

Figure 3

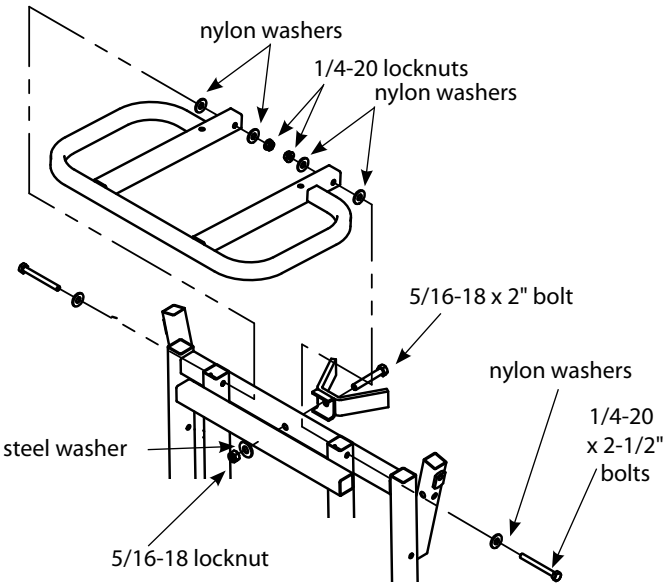

Figure 1

5. Attach the (2) provided 9" camo foam pads (48736) to the armrests by wrapping around tubing and attaching Velcro together.
6. Attach seat pad (48750) to metal seat frame by sliding seat frame into seat pocket. Wrap the Velcro seat straps or buckle straps around seat frame and secure together. Snap the side release buckles together for buckle style seats. Pull straps tight so seat is not loose.
7. Attach backpacking straps (48067) at desired location on platform. Fold strap in half. Feed folded strap through platform mesh. Feed the two loose ends of strap through folded loop and pull tight forming a cinch knot. **SEE FIGURES 4A & 4B.** Feed straps through platform mesh and secure with provided tri-slide buckles. **SEE FIGURE 4C.**

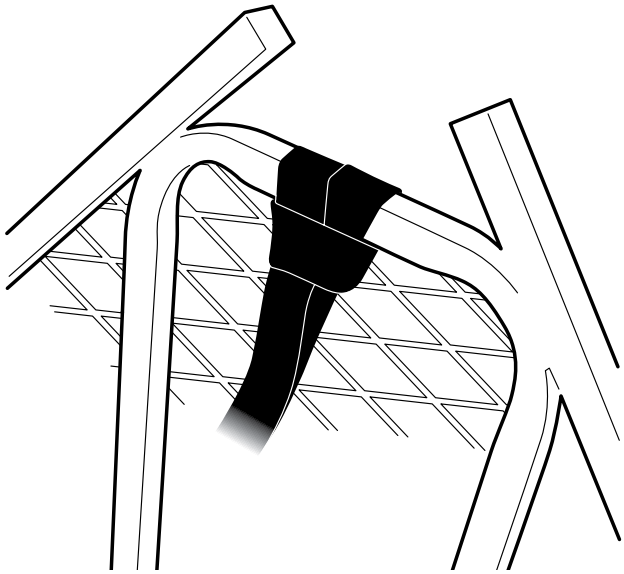

Figure 4B

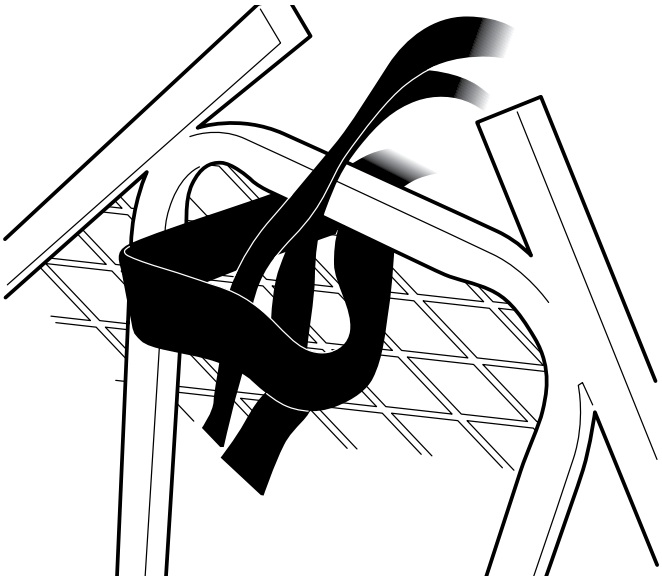

Figure 4A

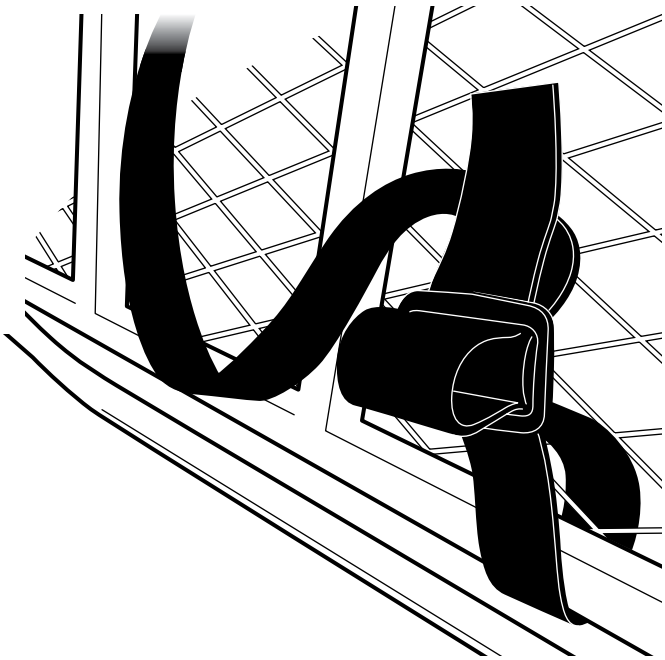

Figure 4C

SET-UP AND USE INSTRUCTIONS (RE509)

During installation and removal of a hang-on treestand, you must always and properly use the included Full Body Harness (Fall Arrest System) with climbing belt. Refer to the Full Body Harness and climbing belt instructions included with this product for proper use. You must always use the Full Body Harness while using this product.

1. At desired height, attach by following instructions - a,b,c,d,e.

   NOTE: Stand should be attached to tree with platform folded in an upright position with armrests removed to allow platform to fold completely!

   a. Lengthen strap by pulling buckle away from strap - this will allow strap to slide around buckle roller.

   b. Take buckle and wrap around tree. Be sure the strap is even and at the same level all the way around the tree. Also, be sure there are no twists in the strap. Connect hook to opposite side of stand by inserting thru hole (slot) provided. **SEE FIGURE 5.**

   c. Pull on excess end of strap firmly - snugging up stand to tree. **SEE FIGURES 5 AND 6.**

   NOTE: Platform must be folded up while doing this.

   d. Once securely attached, pull stand platform down. This lever-action will snug stand up tight to tree to prevent any shifting. Redo as necessary to accomplish a snug stand-to-tree fit. All four contact bars must be touching tree! **SEE FIGURE 6.**

   e. The tension on strap will not allow any slippage due to roller bar tension of buckle. Proper installation should be checked prior to stepping onto platform to ensure safety. **SEE FIGURE 6.**

   NOTE: To remove stand, fold platform back up and pull on buckle hand strap.

2. Before stepping down onto center of stand platform, be sure it is secured properly and is tight against tree with all four contact bars touching tree!
3. Carefully step onto stand platform to be sure you have a solid feel against tree and platform is level. Seat folds down for sitting and tips back for standing.
4. Attach backrest portion of seat to tree by wrapping the long strap with buckle end around tree and snapping together with opposite end. Adjust as needed.

⚠ WARNING

DO NOT TWIST STRAP WHEN ATTACHING. SEE FIGURE 5 FOR CORRECT ATTACHMENT.

DOUBLE CHECK ASSEMBLY STEPS TO BE CERTAIN YOU HAVE CORRECTLY ASSEMBLED THIS PRODUCT.

STUDY YOUR NEW STAND TO BECOME FAMILIAR WITH ALL OF ITS FEATURES AND DESIGN. AT GROUND LEVEL, BEFORE ATTACHING OVERHEAD AND WHILE FOLLOWING PROVIDED USE INSTRUCTIONS, PRACTICE ATTACHING STAND TO TREE, REMOVING STAND FROM TREE, SITTING, AND STANDING.

INSTALLING AND USING THE TREESTAND AT GROUND LEVEL BEFORE ATTEMPTING AT ALTITUDE WILL CONFIRM THAT THE PRODUCT IS MANUFACTURED, ASSEMBLED, AND INSTALLED CORRECTLY. FAILURE TO INSTALL AND TEST AT GROUND LEVEL FIRST PUTS USERS AT RISK FOR SERIOUS INJURY OR DEATH.

ALWAYS CLIMB TREE ON THE ATTACHMENT SIDE OF THIS TREESTAND. VISUALLY INSPECT YOUR CONNECTION TO BE ASSURED YOU HAVE CORRECTLY ATTACHED STAND TO TREE AS PER INSTRUCTIONS AND DIAGRAMS.

THE USE OF A LINEMAN'S/CLIMBING BELT IS REQUIRED WHILE ASCENDING, DESCENDING AND INSTALLING A HANG-ON TREESTAND TO STABILIZE THE USER WITH THE TREE.

CORRECT TIGHTENING AND ADJUSTMENTS OF CHAINS, CABLES, STRAPS, ETC. ARE CRITICAL TO STABLE HANG-ON TREESTAND INSTALLATION. ALL TREESTAND CONTACT POINTS MUST BE IN CONTACT WITH THE TREE BEFORE YOU STEP ONTO YOUR STAND.

PLATFORM MUST BE FOLDED UP TO REMOVE STAND! THIS ALLOWS SLACK IN STRAP FOR REMOVAL.

NEVER PULL YOURSELF UP ONTO PLATFORM - ALWAYS STEP DOWN FROM ABOVE.

NEVER TOUCH OR MOVE BUCKLE WHILE STAND IS IN USE.

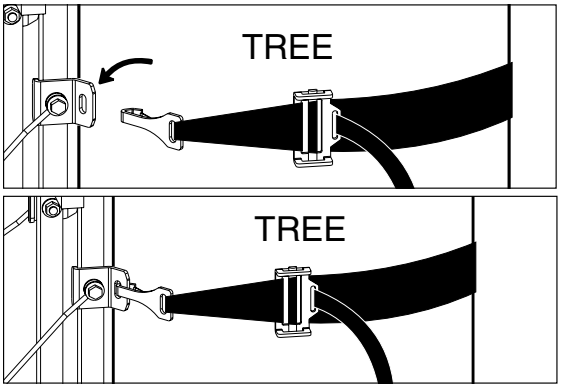

Figure 5

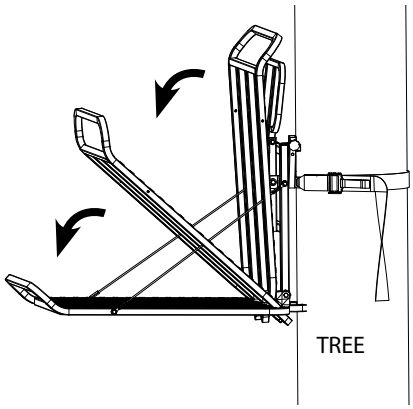

Figure 6

FIXED POSITION HANG-ON PARTS LIST (RE509)

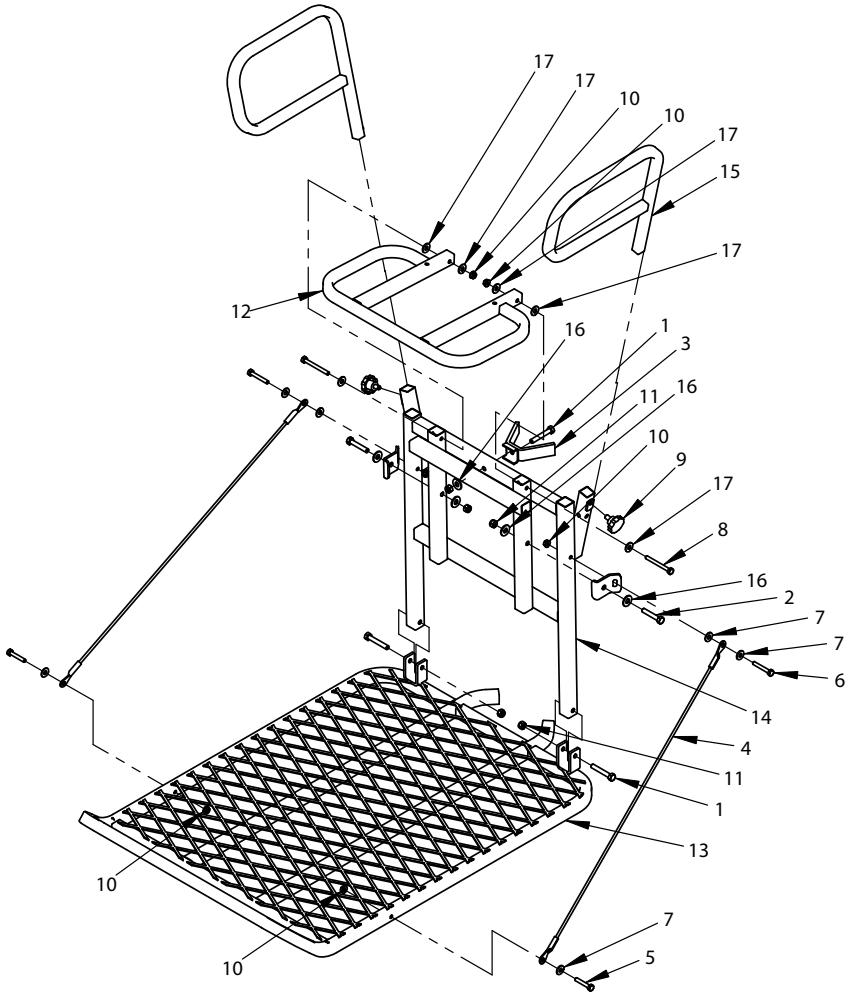

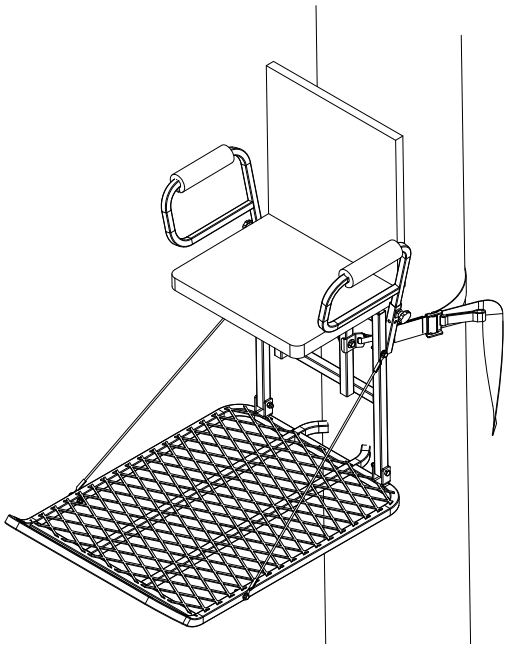

BIG FOOT™ XLT Model RE509

KEY #	PART #	DESCRIPTION	QTY.
1	1423B	BOLT 5/16-18 X 2" HH BLK ZN	3
2	8655B	BOLT 5/16-18 X 1-3/4" HH BLK ZN	2
3	48089	TREE HUGGER	1
4	48212	CABLE 28" BROWN VINYL WITH BLACK ENDS	2
5	48240B	BOLT 1/4-20 X 1-1/2" HH BLK ZN	2
6	48250B	BOLT 1/4-20 X 1-3/4" HH BLK ZN	2
7	48261B	WASHER 1/4" FLAT BLK ZN	6
8	48270B	BOLT 1/4-20 X 2-1/2" HH BLK ZN	2
9	48741	BOLT 5/16-18 X 1/2 KNOB	2
10	48752B	NUT 1/4-20 FLANGE NYLOCK BLK ZN	6
11	60G5NYB	NUT 5/16-18 FLANGE NYLOCK BLK ZN	5

KEY #	PART #	DESCRIPTION	QTY.
12	C30	SEAT FRAME	1
13	CXR21	PLATFORM	1
14	CXR25	SEAT POST	1
15	CXR26	ARMREST ASSEMBLY	2
16	WF516B	WASHER 5/16" FLAT BLK ZN	5
17	WN516	WASHER 5/16" NYLON, BLK	6
ITEMS BELOW NOT SHOWN			
--	48750	SEAT WITH BACKREST	1
--	48736	CAMO SLEEVE WITH FOAM, 9"	1
--	RE760	TREE STRAP ASSEMBLY	1
--	48155	FULL BODY HARNESS (FAS)	1
--	48665	CLIMBING BELT	1
--	48067	KIT, BACKPACK STRAPS	1
--	48800	DVD TREESTAND SAFETY	1

ASSEMBLY INSTRUCTIONS (RE511)

Tools needed – two 7/16" wrenches

IMPORTANT ASSEMBLY TIP: ***Do not tighten any nut and bolt combinations completely until all parts are assembled together! Finger tighten plus one turn of a wrench only! This will temporarily hold the lock nut on the bolt while helping alignment of all parts! After all parts are assembled together, all nut and bolt combinations must be completely tightened.***

1. Attach the seat frame weldment (CXR15) to the seat post (CXR14) using (2) provided 1/4-20 x 2-1/2" bolts, locknuts and (6 to 8) nylon washers. **SEE FIGURE 1. DO NOT tighten all nuts and bolts completely!**

   NOTE: You may need to place 2 nylon washers between seat post upright and seat frame to take up necessary gap.

2. Attach cable (48212) ends to the platform (CXR12) using (2) provided 1/4-20 x 1-1/2" bolts, locknuts and steel washers. **SEE FIGURE 2. You must now tighten all nut & bolt assemblies securely. Be sure not to over tighten or crush tubing when tightening!**

   NOTE: Using powder graphite lubricant during assembly of moving parts will help eliminate noise during use!

3. Attach backpacking straps (48067) at desired location on platform. Fold strap in half. Feed folded strap through platform mesh. Feed the two loose ends of strap through folded loop and pull tight forming a cinch knot. **SEE FIGURES 3A AND 3B.** Feed straps through platform mesh and secure with provided tri-slide buckles. **SEE FIGURES 3C.**

4. Attach padded seat (48103) by feeding straps around the lower portion of seat frame. Feed the long strap through both metal tri-slides that are sewn to opposite side of strap. Wrap the long strap back around one tri-slide and through the second tri-slide and pull tight. **SEE FIGURE 4.** Repeat the same operation for the other seat strap. Adjust as needed to achieve desirable seat height. Excess strap can be tucked away using provided Velcro tabs under the seat.

5. Attach (2) provided 9" camo arm pads (48736) to upper portion of seat frame weldment by wrapping around tubing and attaching Velcro together.

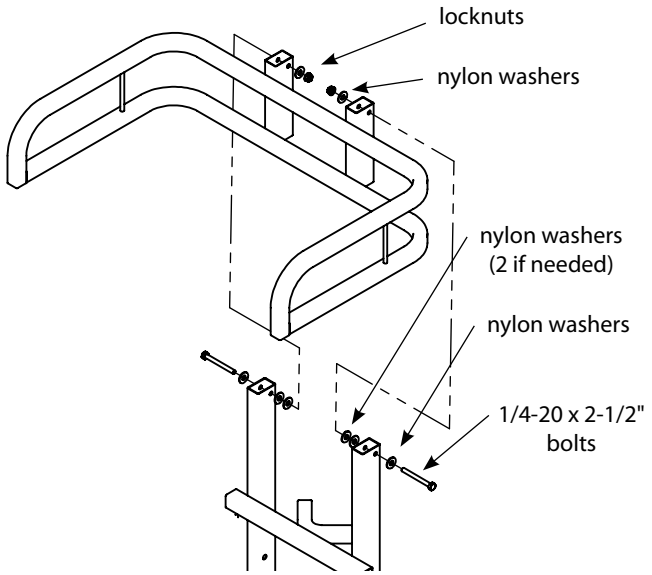

Figure 1

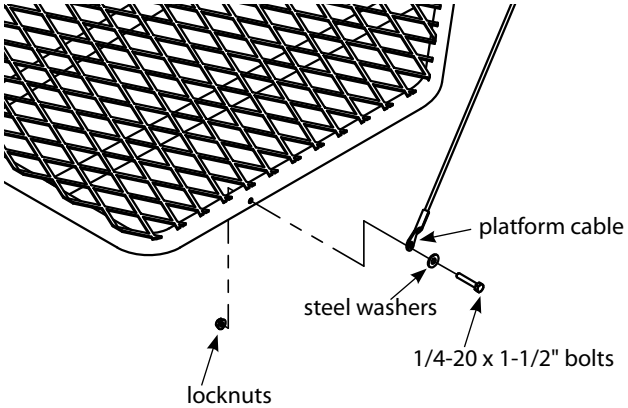

Figure 2

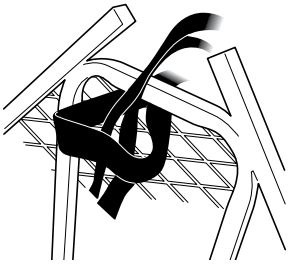

Figure 3A

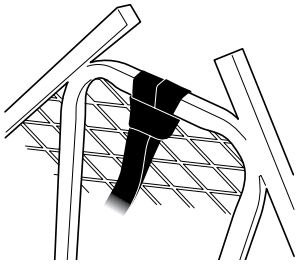

Figure 3B

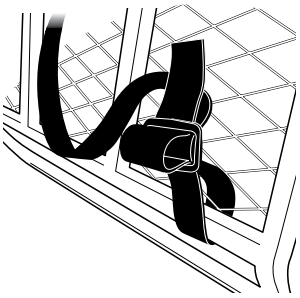

Figure 3C

FRONT VIEW OF SEAT ASSEMBLY

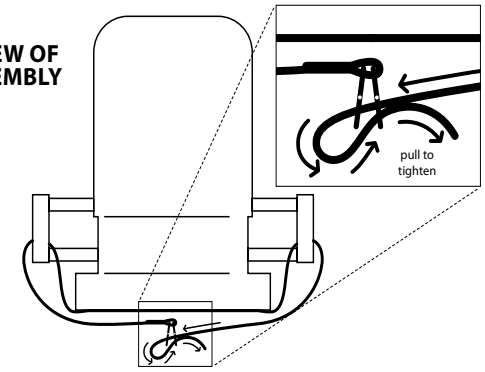

Figure 4

SETUP AND USE INSTRUCTIONS (RE511)

During installation and removal of a hang-on treestand, you must always and properly use the included Full Body Harness (Fall Arrest System) with climbing belt. Refer to the Full Body Harness and climbing belt instructions included with this product for proper use. You must always use the Full Body Harness while using this product.

1. At desired height, attach by following instructions - a,b,c,d,e.

   NOTE: Stand should be attached to tree with platform folded in an upright position!

   a. Lengthen strap by pulling buckle away from strap - this will allow strap to slide around buckle roller.

   b. Take buckle and wrap around tree. Be sure the strap is even and at the same level all the way around the tree. Also, be sure there are no twists in the strap. Connect hook to opposite side of stand by inserting thru hole (slot) provided. **SEE FIGURE 5.**

   c. Pull on excess end of strap firmly - snugging up stand to tree. **SEE FIGURES 5 AND 6.**

   NOTE: Platform must be folded up while doing this.

   d. Once securely attached, pull stand platform down. This lever-action will snug stand up tight to tree to prevent any shifting. Redo as necessary to accomplish a snug stand-to-tree fit. All four contact bars must be touching tree! **SEE FIGURE 6.**

   e. The tension on strap will not allow any slippage due to roller bar tension of buckle. Proper installation should be checked prior to stepping onto platform to ensure safety. **SEE FIGURE 6.**

   NOTE: To remove stand, fold platform back up and pull on buckle hand strap.

2. Before stepping down onto center of stand platform, be sure it is secured properly and is tight against tree with all four contact bars touching tree!
3. Carefully step onto stand platform to be sure you have a solid feel against tree and platform is level. Seat folds down for sitting and tips back for standing.
4. Attach backrest portion of seat to tree by wrapping the long strap with buckle end around tree and snapping together with opposite end. Adjust as needed.

⚠ WARNING

DO NOT TWIST STRAP WHEN ATTACHING. SEE FIGURE 5 FOR CORRECT ATTACHMENT.

DOUBLE CHECK ASSEMBLY STEPS TO BE CERTAIN YOU HAVE CORRECTLY ASSEMBLED THIS PRODUCT.

STUDY YOUR NEW STAND TO BECOME FAMILIAR WITH ALL OF ITS FEATURES AND DESIGN. AT GROUND LEVEL, BEFORE ATTACHING OVERHEAD AND WHILE FOLLOWING PROVIDED USE INSTRUCTIONS, PRACTICE ATTACHING STAND TO TREE, REMOVING STAND FROM TREE, SITTING, AND STANDING.

INSTALLING AND USING THE TREESTAND AT GROUND LEVEL BEFORE ATTEMPTING AT ALTITUDE WILL CONFIRM THAT THE PRODUCT IS MANUFACTURED, ASSEMBLED, AND INSTALLED CORRECTLY. FAILURE TO INSTALL AND TEST AT GROUND LEVEL FIRST PUTS USERS AT RISK FOR SERIOUS INJURY OR DEATH

ALWAYS CLIMB TREE ON THE ATTACHMENT SIDE OF THIS TREESTAND. VISUALLY INSPECT YOUR CONNECTION TO BE ASSURED YOU HAVE CORRECTLY ATTACHED STAND TO TREE AS PER INSTRUCTIONS AND DIAGRAMS.

THE USE OF A LINEMAN'S/CLIMBING BELT IS REQUIRED WHILE ASCENDING, DESCENDING AND INSTALLING A HANG-ON TREESTAND TO STABILIZE THE USER WITH THE TREE.

CORRECT TIGHTENING AND ADJUSTMENTS OF CHAINS, CABLES, STRAPS, ETC. ARE CRITICAL TO STABLE HANG-ON TREESTAND INSTALLATION. ALL TREESTAND CONTACT POINTS MUST BE IN CONTACT WITH THE TREE BEFORE YOU STEP ONTO YOUR STAND.

PLATFORM MUST BE FOLDED UP TO REMOVE STAND! THIS ALLOWS SLACK IN STRAP FOR REMOVAL.

NEVER PULL YOURSELF UP ONTO PLATFORM - ALWAYS STEP DOWN FROM ABOVE.

NEVER TOUCH OR MOVE BUCKLE WHILE STAND IS IN USE.

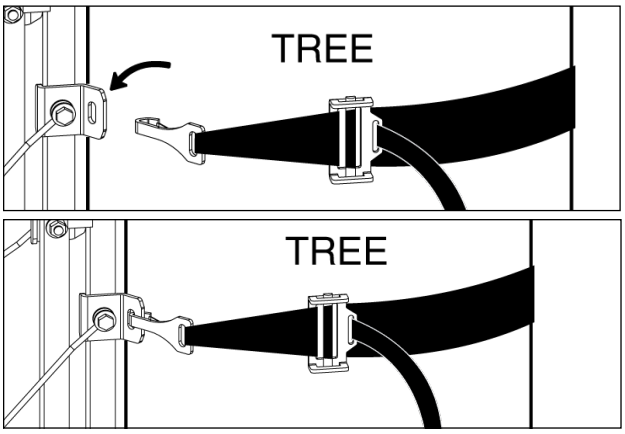

Figure 5

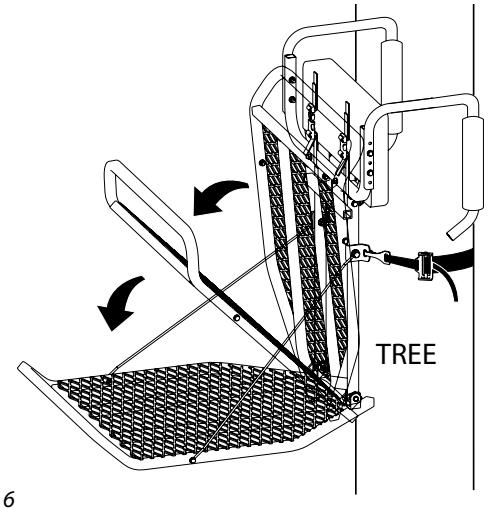

Figure 6

FIXED POSITION HANG-ON PARTS LIST (RE511)

KEY #	PART #	DESCRIPTION	QTY.
1	1423B	BOLT 5/16-18 X 2 HHCS GR5 BLK ZN	2
2	48153B	BOLT 1/4-20 X 2 HHCS GR5 BLK ZN	2
3	48212	CABLE- 28" BROWN VINYL	2
4	48240B	BOLT 1/4-20 X 1-1/2 HHCS GR5 BLK ZN	2
5	48261B	WASHER FLAT 1/4" BLACK	2
6	48270B	BOLT 1/4-20 X 2-1/2 HHCS GR5 BLK ZN	2
7	48752B	NUT, FLANGED, NYLOCK, 1/4-20	6
8	60G5NYB	NUT 5/16-18 NYLOCK BLACK	2
9	CXR12	WELDMENT, PLATFORM, LOUNGER	1
10	CXR14	WELDMENT, FTS, SEAT POST LOUNGER	1
11	CXR15	WELDMENT, SEAT FRAME, LOUNGER	1
12	WF516B	WASHER FLAT 5/16" STANDARD BLACK ZN	6
13	WN516	WASHER, 5/16", BLACK NYLON	10
ITEMS BELOW NOT SHOWN			
--	RE760	TREE STRAP ASSEMBLY	1
--	48155	FULL BODY HARNESS (FAS)	1
--	48665	CLIMBING BELT	1
--	48103	SEAT W/ BACKREST, LOUNGER HANG-ON	1
--	48736	CAMO ARMREST PAD, 9"	2
--	48067	KIT, BACKPACK STRAPS	1
--	48800	DVD TREESTAND SAFETY	1

FIXED POSITION HANG-ON PARTS (RE511)

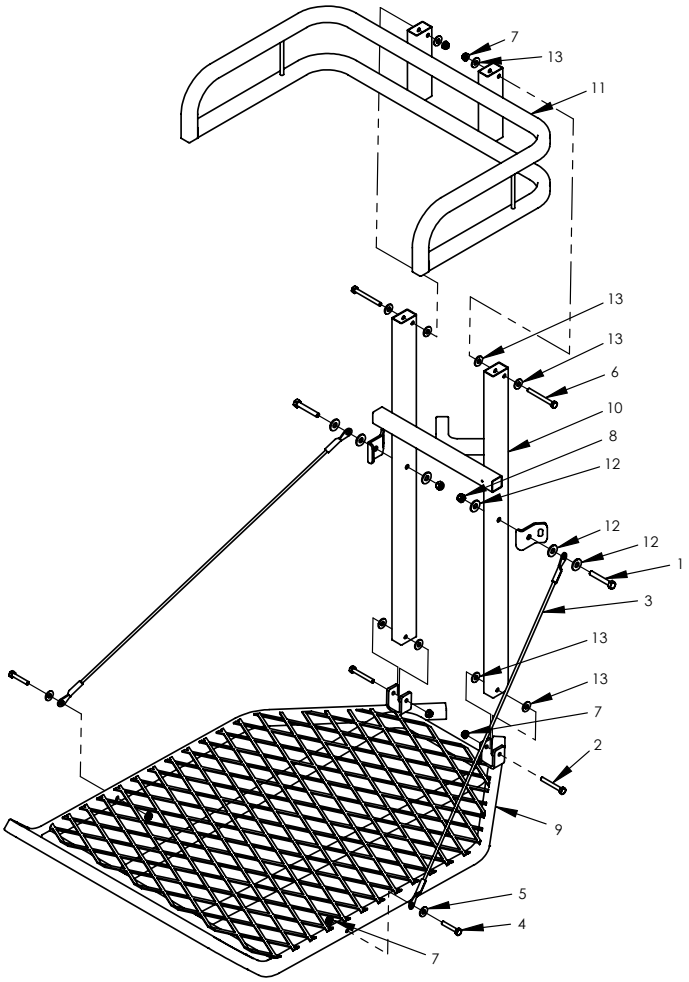

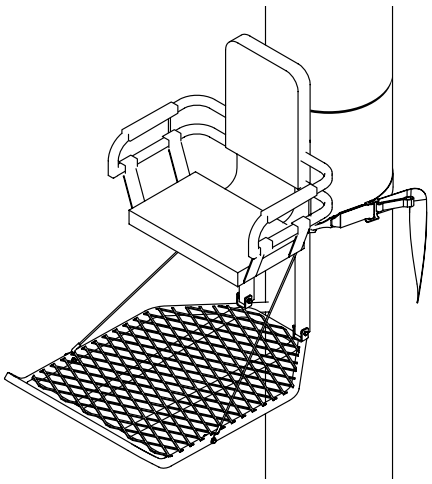

BIG FOOT™ XL LOUNGER MODEL RE511

BOLT IDENTIFICATION CHART

Not all bolt sizes shown are included with all treestands. Bolts shown are for size reference only. Extra hardware may be included in the parts bag.

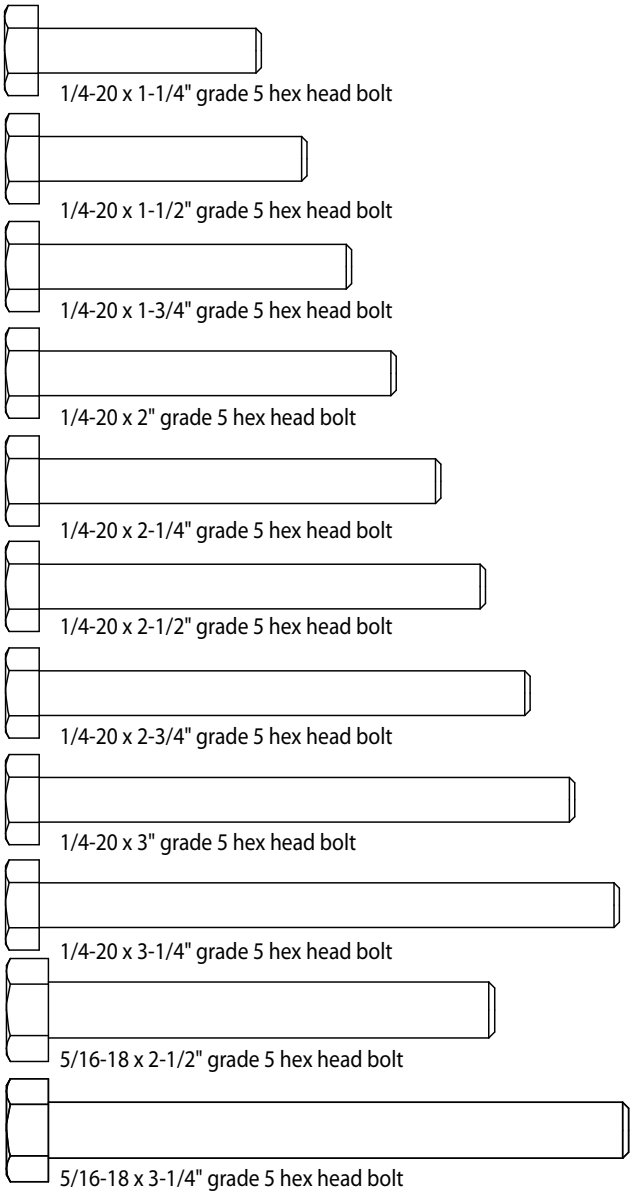

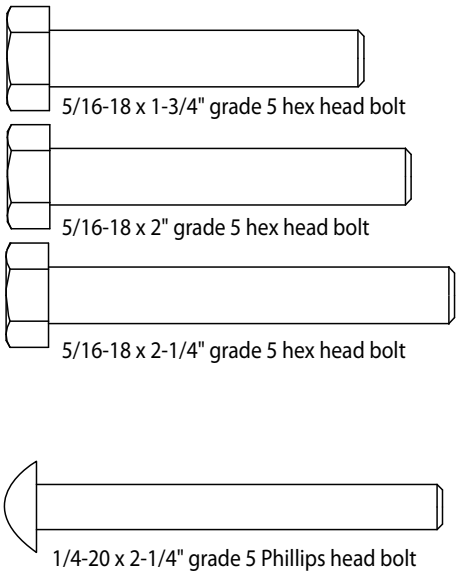

Rivers Edge® Treestands, Inc.
1160 Eighth Avenue, PO Box 755
Cumberland, WI 54829
800-450-EDGE (3343) | Fax 715-822-2124
Email: info@huntriversedge.com

All weights, specifications and features are approximate and are subject to change without notice. Due to continuous product improvements, product images may not be exact. Warning labels in some product images may have been removed for photography purposes only. Props shown in photos not included. Some assembly may be required.