LANDMARK™
PERMANENT BLINDS
RIVERS EDGE®

Operator's Manual

LM622

Landmark™ 6' 600 Tower

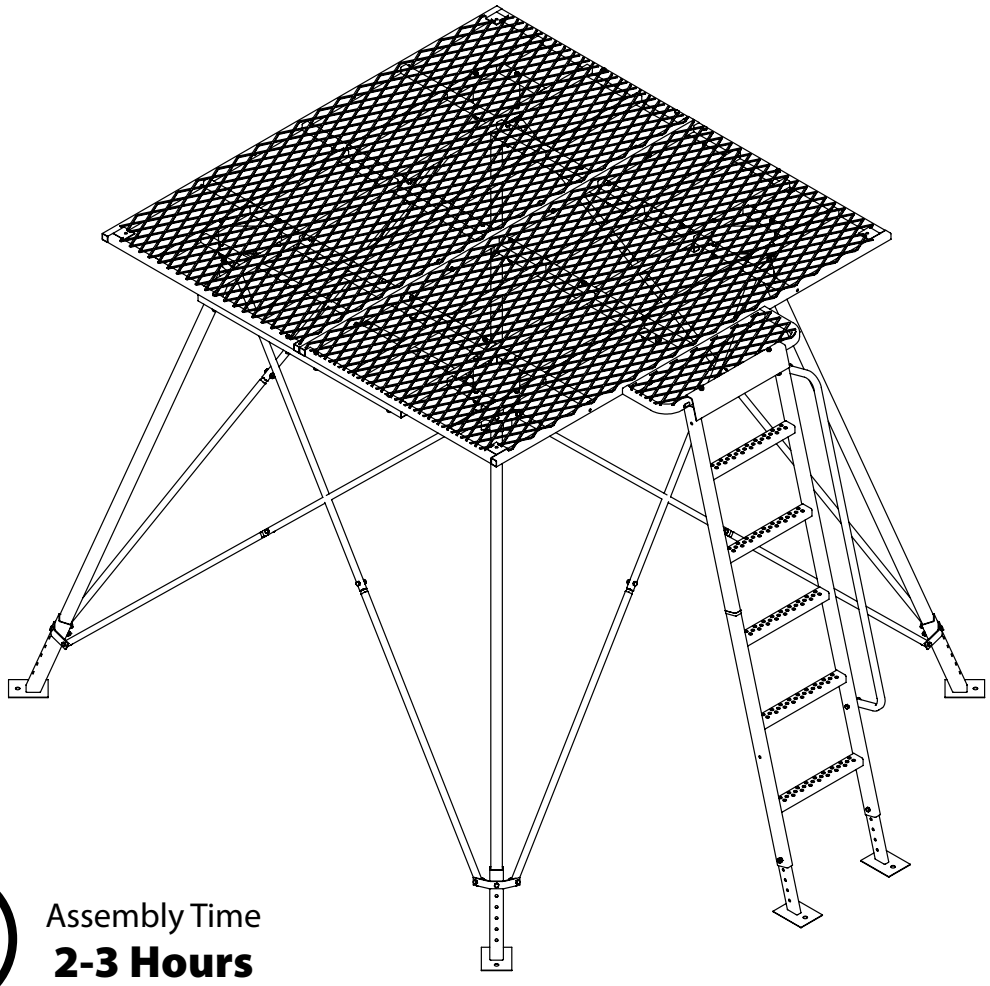

Assembly Time
2-3 Hours

PRODUCT MEETS INDUSTRY STANDARDS RECOGNIZED BY
TMA®
PARTICIPATING MEMBER

WARNING! FALL HAZARD!
FALLS FROM HEIGHTS MAY RESULT IN SERIOUS INJURY OR DEATH!

Watch video before using.
standsafety.com/r5
TRIPOD STAND SAFETY

RIVERS EDGE® TREESTANDS

Get parts online at
www.HuntRiversEdge.com

P/N: 32400
REV1: 02/07/19
© 2019 RETI
All Rights Reserved

INTRODUCTION

We appreciate your purchase of one of our world class products. Follow these few simple instructions and this product will provide you many years of trouble-free pleasure. Instructions should be kept in a safe place and reviewed at least annually.

If for any reason you have a problem with your product, **DO NOT return to the retailer**, contact the RETI customer service department at 800-450-3343 for assistance.

CONTENTS

Introduction/Warranty 2
Warnings 3-4
Inspection and Maintenance Schedule 4
Hardware Identification Chart 5
Assembly Instructions 7-18
Warnings 19
Parts Breakdown and Parts List 20-21
Notes Pages 22-23

WARRANTY

RETI offers a one year warranty for all components of the treestand. These warranties apply to the original owner with a proof of purchase. These warranties begin on the date of purchase by the first retail consumer and continue for the period specified above. These warranties apply to products that are not modified, abused or used in a manner that deviates from the product's intended usage. Minor fading in color is normal and is not covered by warranty. Any corrosion of painted surfaces that occurs as a result of paint being removed or damaged is also not covered by warranty. RETI offers no other warranty expressed or implied. Products for which warranty work has been approved must be sent directly to RETI and performed by RETI. **To obtain warranty service and/or replacement instructions, you must obtain prior approval from RETI before shipping your package to us by calling our customer service department at 800-450-3343 or by writing to: RETI, P.O. Box 755, 1160 Eighth Avenue, Cumberland, WI 54829 for a return material authorization number (RMA#).** All items must be shipped prepaid. RETI will, at no charge, repair or replace, in RETI's sole discretion, any product that satisfies the conditions stated above. RETI retains the right to change models, specifications and price without notice.

This equipment has been manufactured under strict quality and safety guidelines. As with any equipment of this type, full understanding of the instructions and its use is mandatory and imperative for the safety of its user. RETI is not responsible for any damages or injuries sustained due to improper use or modification of any of its products, or resulting from any use which deviates from the product's intended usage. RETI is not responsible for any injuries sustained due to failure to read and adhere to the instructions for use. Any misunderstanding or questions regarding the products of their use should be directed to RETI prior to any use. It is the owner's sole responsibility to inspect the product regularly for damage, improper installation, or conditions that could jeopardize the ultimate safety of the product. **Owner is responsible to understand and follow product field weight rating and must never exceed maximum weight rating.** RETI is not responsible for any malfunction or injury resulting from normal wear and tear, damage caused by improper use, improper maintenance, negligence or accidents. This product, if used safely as intended, will provide trouble free service for the useful life of the product. We hope you will enjoy the quality of our products for years to come, and have a safe hunt.

If you choose to attach a blind type structure on this product, only use RETI original designed structures to do so.*Using man-made structures or structures not manufactured by RETI will void your warranty and waive any and all claims for liability against the manufacturer RETI.

MODEL LM622

MAXIMUM USE HEIGHT - 6' TO PLATFORM

TOTAL WEIGHT LIMIT - 800 LB (300 lb Per Person Max)

⚠ WARNING

- This product carries strict height and weight restrictions. **Do Not** use this product if you exceed the total weight limit. Please note that the total weight limit includes the user(s) and their equipment.

⚠ WARNING

- **When hunting from a treestand or free standing platform stand falls can occur any time after leaving the ground causing injury or death.**
- **Read and understand** all of the manufacturer's Warnings and Instructions and use all safety devices provided by the manufacturer. Contact the manufacturer for any questions. Failure to do so could result in injury or death.
- **Never** exceed the total weight limit of the treestand or free standing platform stand.
- **Never** use a treestand or free standing platform stand during inclement weather such as rain, lightning, windstorms or icy conditions and end your hunt and return to the ground if inclement conditions arise.
- **Never** use a treestand or free standing platform stand while using drugs (even prescription drugs) or alcohol.
- **Never** use a treestand or free standing platform stand while feeling ill, nauseous or dizzy, or if you have a prior medical condition that could cause a problem, that is, heart condition, joints that lock-up, spinal fusions, etc., or if you are not well rested. **Never** sleep in stand.
- **Always** avoid electrical power lines.
- **Never** rely on a tree branch for support.
- **Never** jump or bounce on a treestand or free standing platform stand to seat it to the tree or ground.
- Pull up a bow, backpack, or firearm or other equipment only after being secure in the treestand or free standing platform stand and a firearm must be pulled up with it unloaded, chamber open, and muzzle down.
- **Always** inform someone of the hunting location, where the treestand or free standing platform stand will be located and the expected duration of the hunt.

⚠ WARNING

- A signal device such as a mobile phone, radio, whistle, signal flare or personal locator device (PLD) must be on your person and readily available at all times.
- Inspect the treestand or free standing platform stand and all safety devices each time before use and **Do Not** store a treestand or free standing platform stand outdoors when not in use.
- **Never** modify your treestand or free standing platform stand in any way by making repairs, replacing parts, or altering it except if explicitly authorized in writing by the manufacturer.
- Practice installing, adjusting and using your treestand or free standing platform stand at ground level prior to using it at elevated positions. Study your new stand to become familiar with all of its features and design. Doing so will confirm that the product is manufactured, assembled and installed correctly.
- Instructions (written and video) shall be kept in a safe place and reviewed at least annually. It is the responsibility of the treestand or free standing platform stand owner to furnish the complete instructions to any person who borrows or purchases the treestand or free standing platform stand.
- **Always** use at least four (4) people to install or take down a free standing platform stand.
- Stabilization devices must be attached before climbing to the platform.
- When installing a ladder stand or free standing platform stand, always bounce on the first rung to set the ladder into the ground according to manufacturer's instructions before proceeding to climb any higher.
- Check every ladder/leg section connection every time you use the stand before you leave the ground. If ladder/leg sections are separating, do not use the stand.
- Check the ground under the stand to make sure it is firm and level. Sloping ground or uneven surface (one side on a rock) can cause your ladder or free standing platform stand to tilt or shift off as you climb.
- **Always** maintain three (3) points of contact when climbing a ladder treestand or free standing platform stand. Proper three-point contact means having either two feet with one hand or one foot with two hands on the step portion of the ladder or climbing aid at all times.
- **Always** lean forward as you climb ladder or climbing aid.
- **Never** exceed the stated maximum use height.

⚠ WARNING

- ⚠ **Do Not** use this product until you have watched the safety video, understand it, and practiced the techniques for safe hunting discussed in this video. The video can be found with the QR code and/or URL shown on front cover of this manual.
- ⚠ Read and perform all inspection and maintenance tasks before each and every use. Replace any questionable components immediately with RETI original replacement parts.
- ⚠ **Do Not** crush tubing when tightening bolt assemblies! Identify and familiarize yourself with all parts before you start. Bolt identification chart can be found in the back.
- ⚠ Double check assembly steps to be certain you have correctly assembled this product.
- ⚠ **Never** use any product that has not been maintained or inspected properly - Your life depends on it!
- ⚠ **Always** wear the appropriate footwear when using a free standing platform stand. A good non-slip safety boot is important to your personal safety. Be especially careful that boot laces do not get hooked on the stand or any of its components (tuck shoelaces into boots before climbing).
- ⚠ Do not position this product on a slope, unlevel, or wet ground. It may tip over and serious injury or death may occur.
- ⚠ Ground must be free of rocks and debris so stakes can be driven into ground through holes provided in foot pads. This will help prevent tower from tipping over in strong winds.
- ⚠ Contacting buried utilities may result in serious injury or death! Before digging always call 811 or you local One-Call system to prevent person injury, interruption of service, environmental accidents or project delays.
- ⚠ Heavy product, **Always** use at least four (4) people to install or take down a free standing platform stand. **Do Not** let someone with a history of back problems help.

INSPECTION AND MAINTENANCE SCHEDULE

BEFORE EACH USE PERFORM THE FOLLOWING:

- Inspect all webbing, rope, cord, and strap assemblies for wear or damage.
- Inspect cables and/or cable ends for damage or kinking.
- Inspect all hardware and chain components for damage.
- Inspect for any structural damage to product. (If any exists call RETI customer service.)
- Inspect all nut and bolt assemblies to be certain none are loose.
- Inspect for any missing parts.
- Lubricate all pivot and slide together points with powder graphite, petroleum jelly or silicone spray to prevent noise, wear and rust.
- Inspect entire product for any rust, corrosion, cracks, freezing, excessive heat or rotting damage that may effect the safety of your product. Discard any questionable product.
- Inspect entire product for any structural damage - pay close attention to all weld locations. (Return to factory for repair or discard product if any damage is found.)
- Using correct wrenches inspect all nut & bolt assembly locations and snug up any that may be loose. Be careful not to crush tubing when tightening!
- Inspect and check operation of all cables, cable ends, cord, rope, webbing, and strap or chain assemblies. Replace with factory new any item or assembly that shows signs of wear, damage, kinking, or functions incorrectly.
- Inspect seat. Replace any seat with factory new that shows signs of structural damage or wear.
- Inspect all hardware for wear or damage, also be sure you have no missing parts.
- Never modify your stand in any way by making repairs, replacing parts, or altering adding or attaching anything to it except if explicitly authorized in writing by the manufacturer.

HARDWARE IDENTIFICATION CHART

Bolts shown are for size reference.
Extra hardware may be included in the parts bag.

Quick Tip: Cut page out to use as a reference tool while following assembly instructions

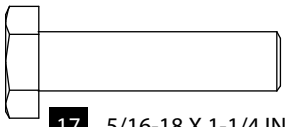

17 5/16-18 X 1-1/4 IN Bolt - **Qty 8**

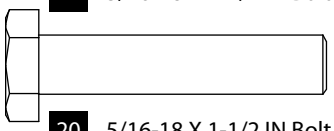

20 5/16-18 X 1-1/2 IN Bolt - **Qty 18**

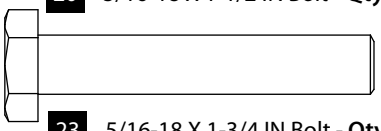

23 5/16-18 X 1-3/4 IN Bolt - **Qty 18**

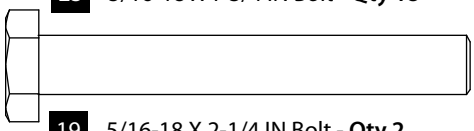

19 5/16-18 X 2-1/4 IN Bolt - **Qty 2**

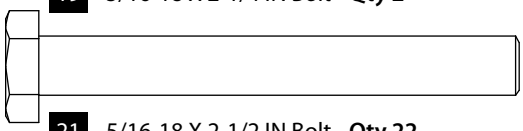

21 5/16-18 X 2-1/2 IN Bolt - **Qty 22**

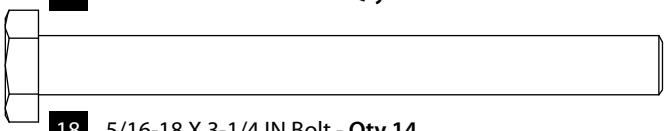

18 5/16-18 X 3-1/4 IN Bolt - **Qty 14**

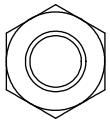

22

5/16-18 Nut
Qty 82

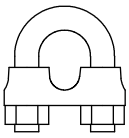

25 1/8 IN Cable Clamp - **Qty 4**

BLIND ATTACHMENT HARDWARE

26 5/16-18 X 1 IN Bolt - **Qty 4**

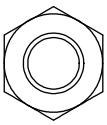

27

5/16-18 Nut
Qty 4

TOOLS FOR ASSEMBLY *(NOT TO SCALE)*

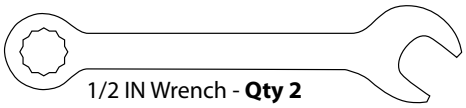

1/2 IN Wrench - **Qty 2**

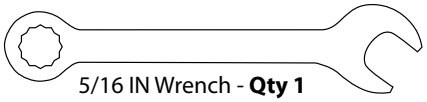

5/16 IN Wrench - **Qty 1**

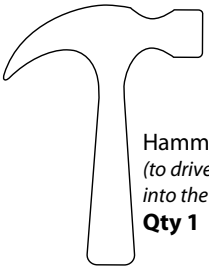

Hammer
(to drive stakes into the ground)
Qty 1

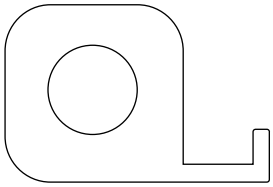

Tape Measure - **Qty 1**

⚠ WARNING

⚠ **Only** use approved RETI parts. Failure to do so may result in serious injury or death!

All assembly must be done completely in this order before use.

Measure out assembly/intended use location, assembled footprint of product is 7' 8" x 9' 4". Allow additional room for assembly.

Do not remove labels/warnings from product, they are there for your safety.

Recommended for adult use only.

FIGURE 1

Mesh hidden for clarity

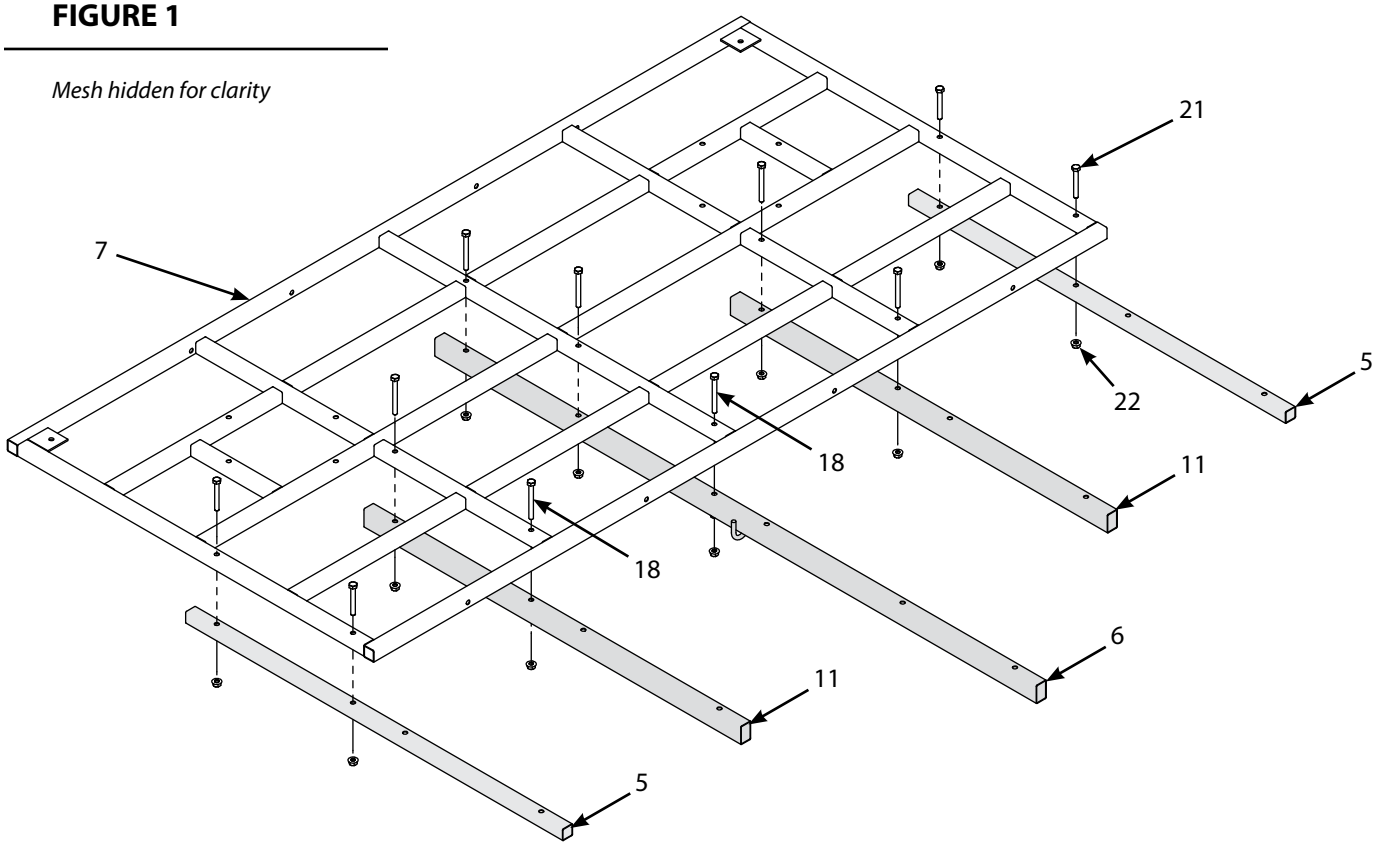

1. Attach two, square, outside platform braces (5) to the bottom of one platform (7) using two 5/16-18 X 2-1/2 IN bolts (21) and nuts (22) for each brace. **SEE FIGURE 1.**
2. Attach two, rectangular platform braces (11) to the bottom of same platform using two 5/16-18 X 3-1/4 IN bolts (18) and nuts (22) for each brace. **SEE FIGURE 1**.
3. Attach center, rectangular, platform brace (6) to the bottom, center of same platform using three 5/16-18 X 3-1/4 IN bolts (18) and nuts (22). Make sure welded on loop is oriented down (away) from platform. **SEE FIGURE 1.**

FIGURE 2

Mesh hidden for clarity

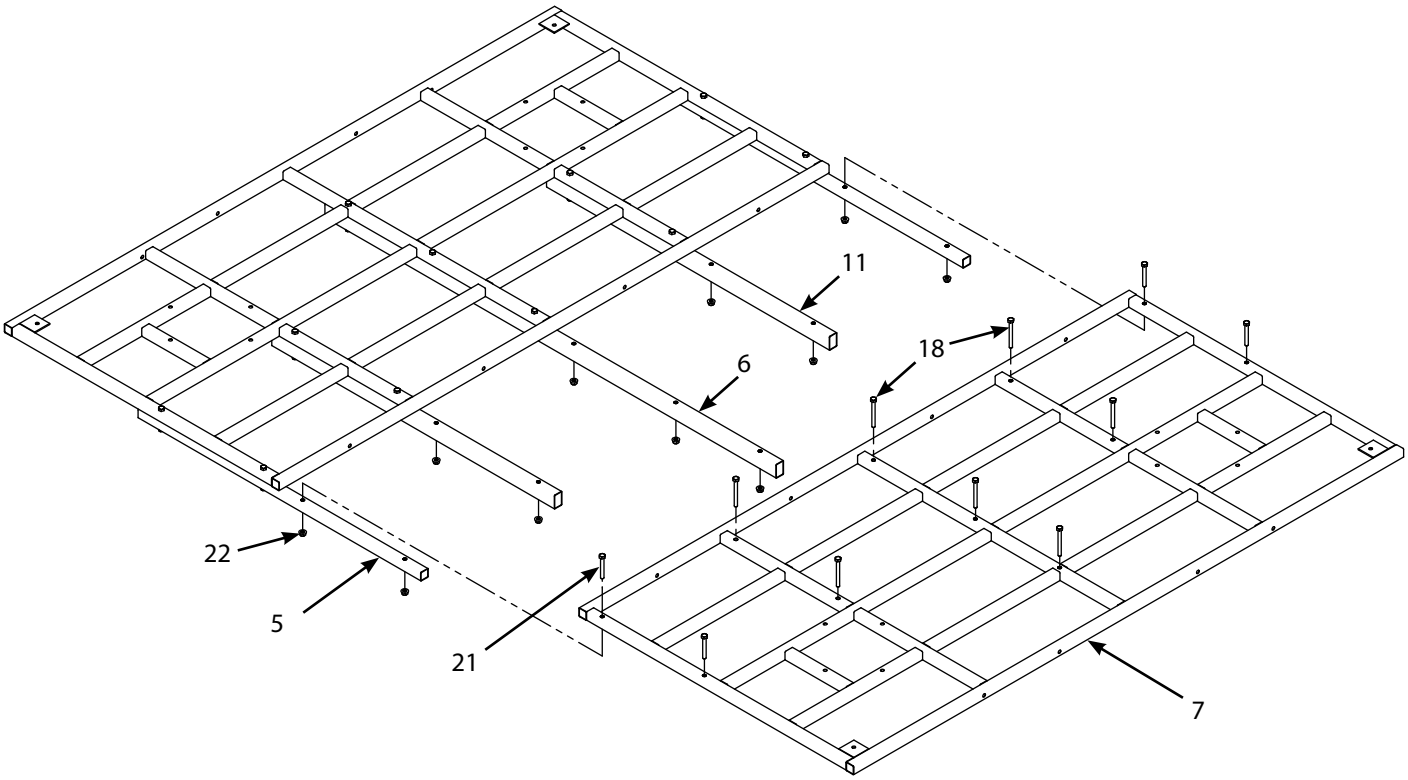

4. Attach second platform (7) to all five platform braces (5, 6, 11) using four 5/16-18 X 2-1/2 IN bolts (21) on the two outside, square, platform braces (5), seven 5/16-18 X 3-1/4 IN bolts (18) on the three inside, rectangular, platform braces (6, 11), and nuts (22). **SEE FIGURE 2**.

FIGURE 3

Mesh hidden for clarity

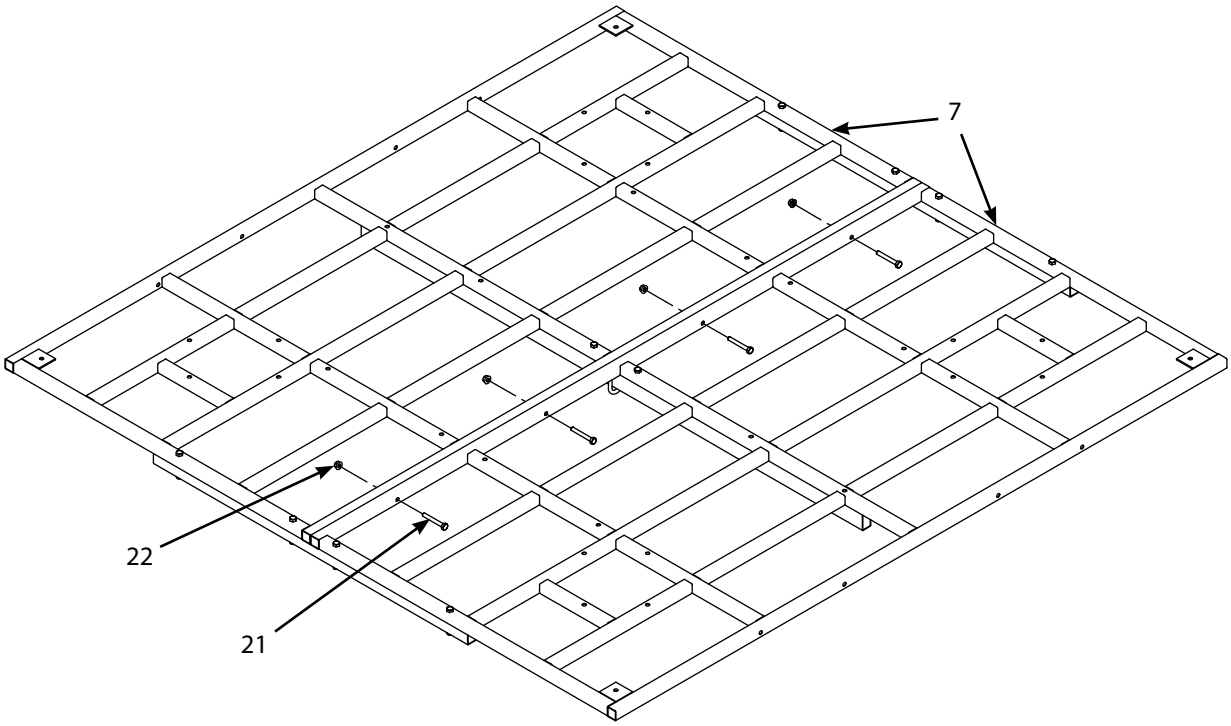

5. With platforms and braces partially assembled, secure the two platforms (7) together using four 5/16-18 X 2-1/2 IN bolts (21) and nuts (22). Securely tighten all loose platform hardware at this time. **SEE FIGURE 3**.

FIGURE 4

Mesh hidden for clarity

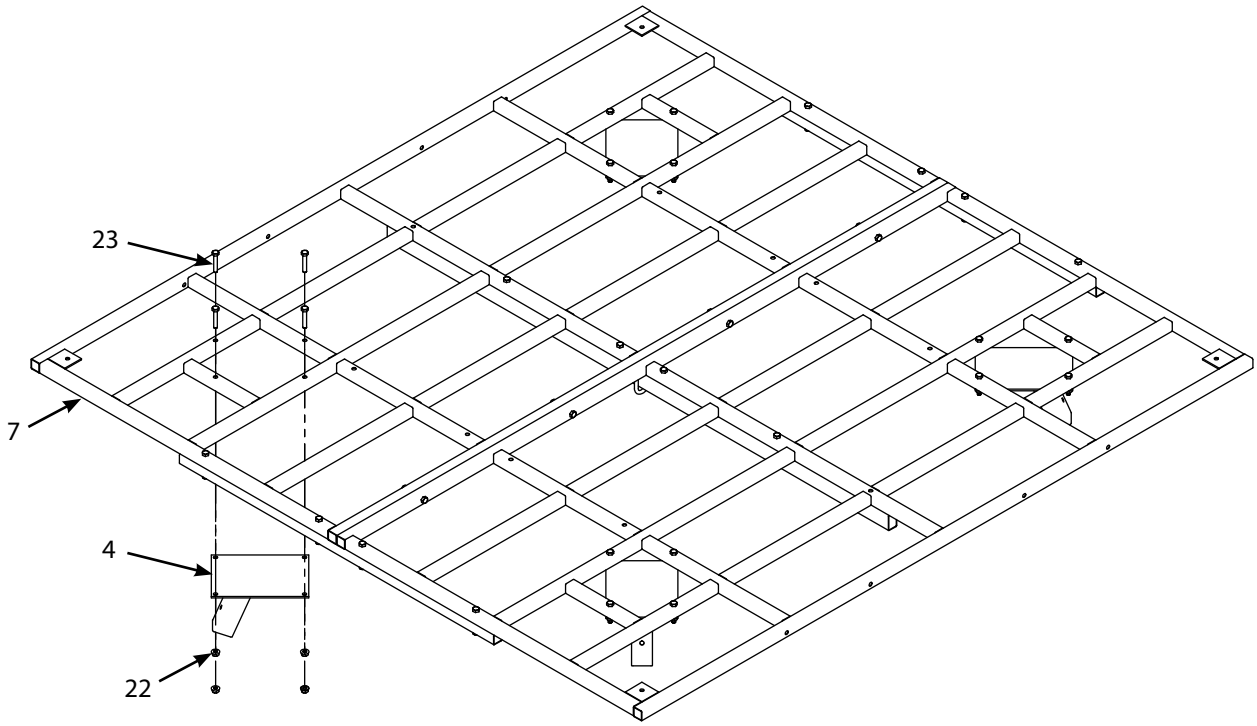

6. Attach the four leg brackets (4) to the bottom of assembled platforms (7) using sixteen 5/16-18 X 1-3/4 IN bolts (23) and nuts (22). Make sure brackets are oriented so they all point "outward" towards the outer corners of assembled platforms. Tighten all loose hardware securely at this time. **SEE FIGURE 4.**

FIGURE 5

Mesh hidden for clarity

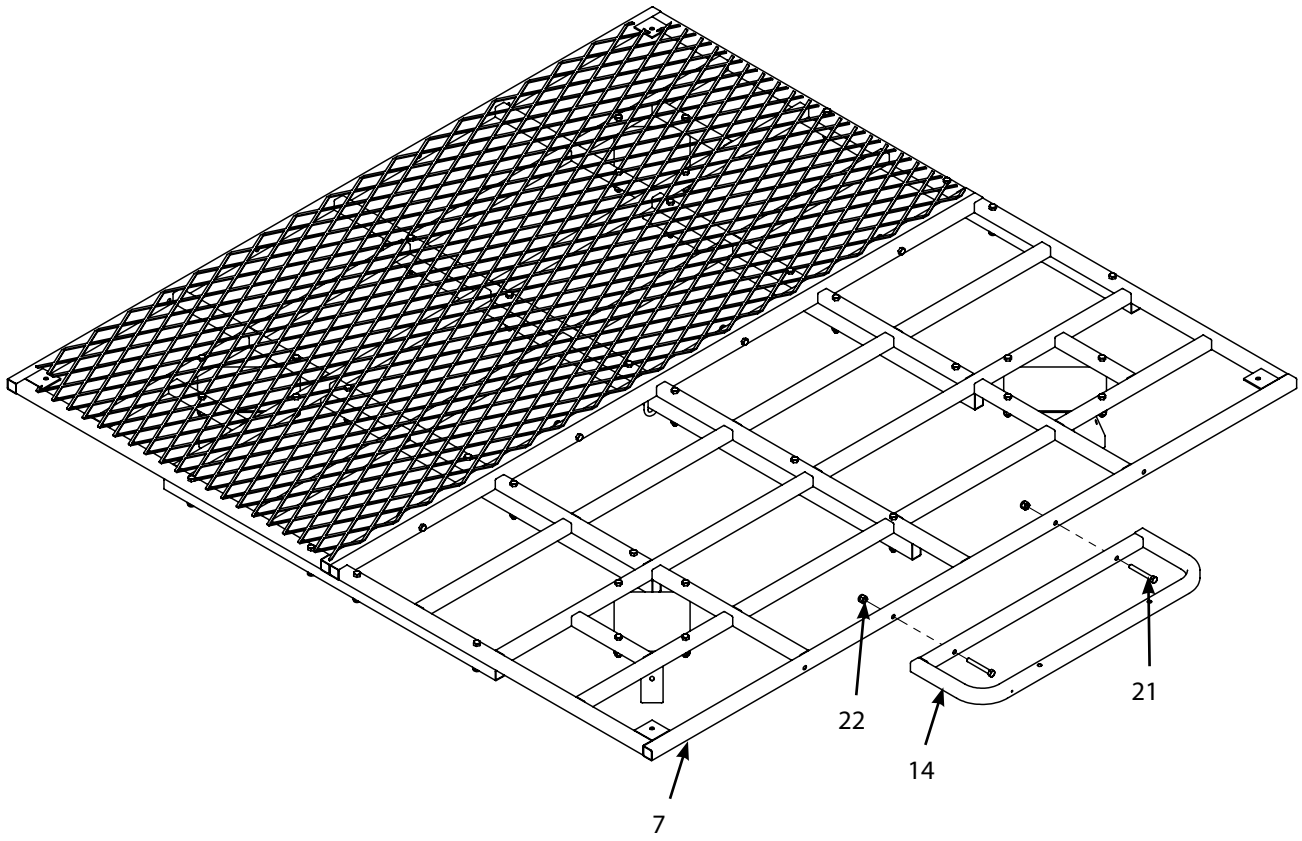

7. Attach entry platform (14) to one platform (7) using two 5/16-18 X 2-1/2 IN bolts (21) and nuts (22). Tighten all loose hardware securely at this time. **SEE FIGURE 5.**

FIGURE 6

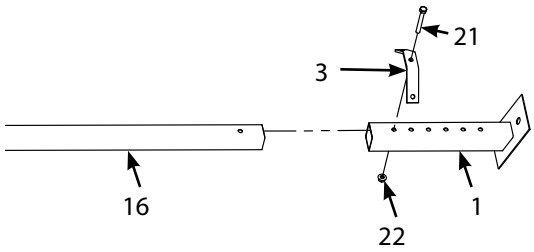

FIGURE 7

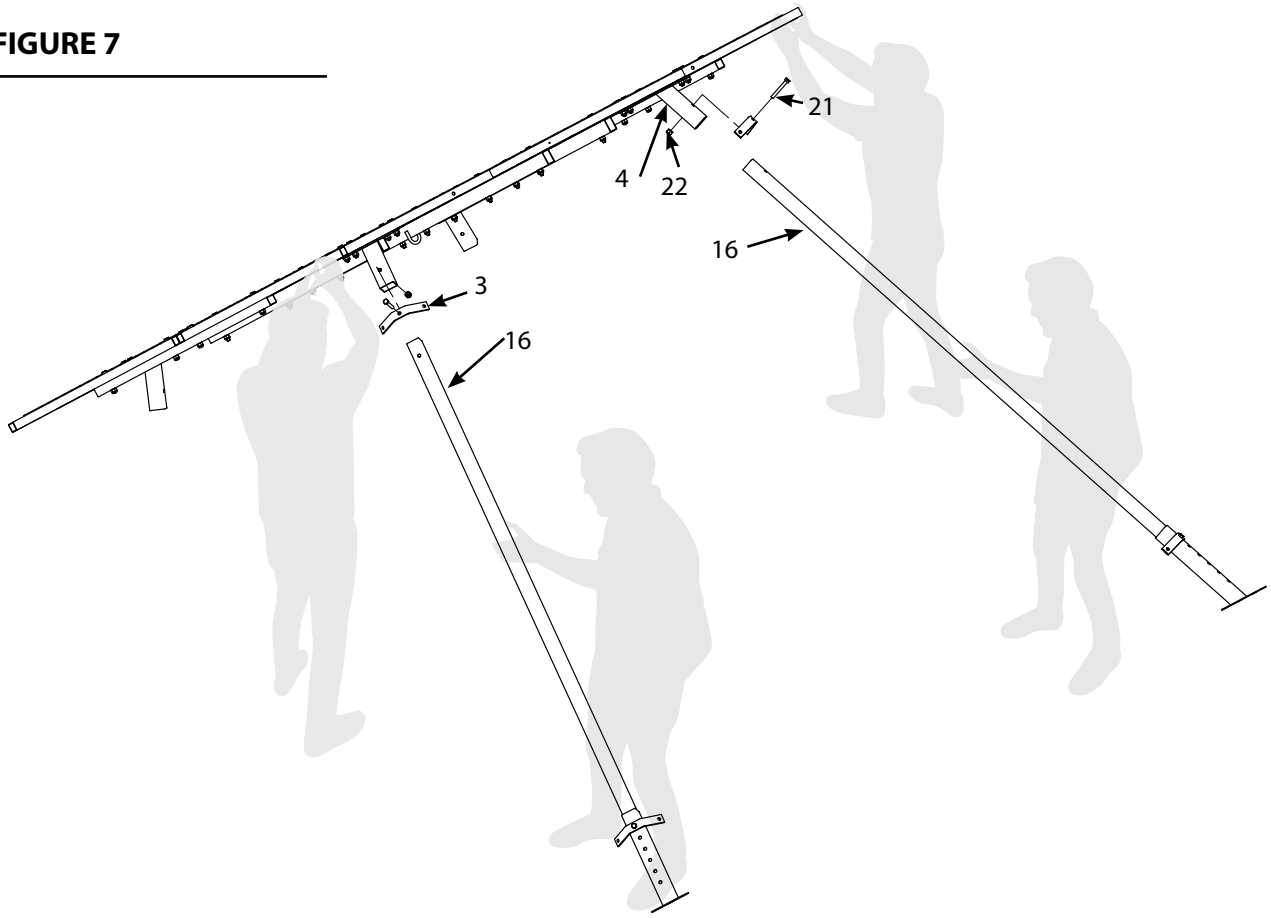

8. Slide one foot (1) onto each lower leg (16). Attach brace attachment brackets (3) to each of the feet (1) using four 5/16-18 X 2-1/2 IN bolts (21) and 5/16-18 nuts (22). Make sure the bolt passes through both the lower leg (16) and the foot (1). **SEE FIGURE 6.**
9. With the help of two people, tip assembled platform onto the back side by lifting on the entry platform side and inserting two legs (16) into leg brackets (4). Attach brace attachment bracket (3) to each leg bracket (4) and secure together using two 5/16-18 X 2-1/2 IN bolts (21) and nuts (22). Bolts must go through all components. **SEE FIGURE 7**.

FIGURE 8

Mesh hidden for clarity

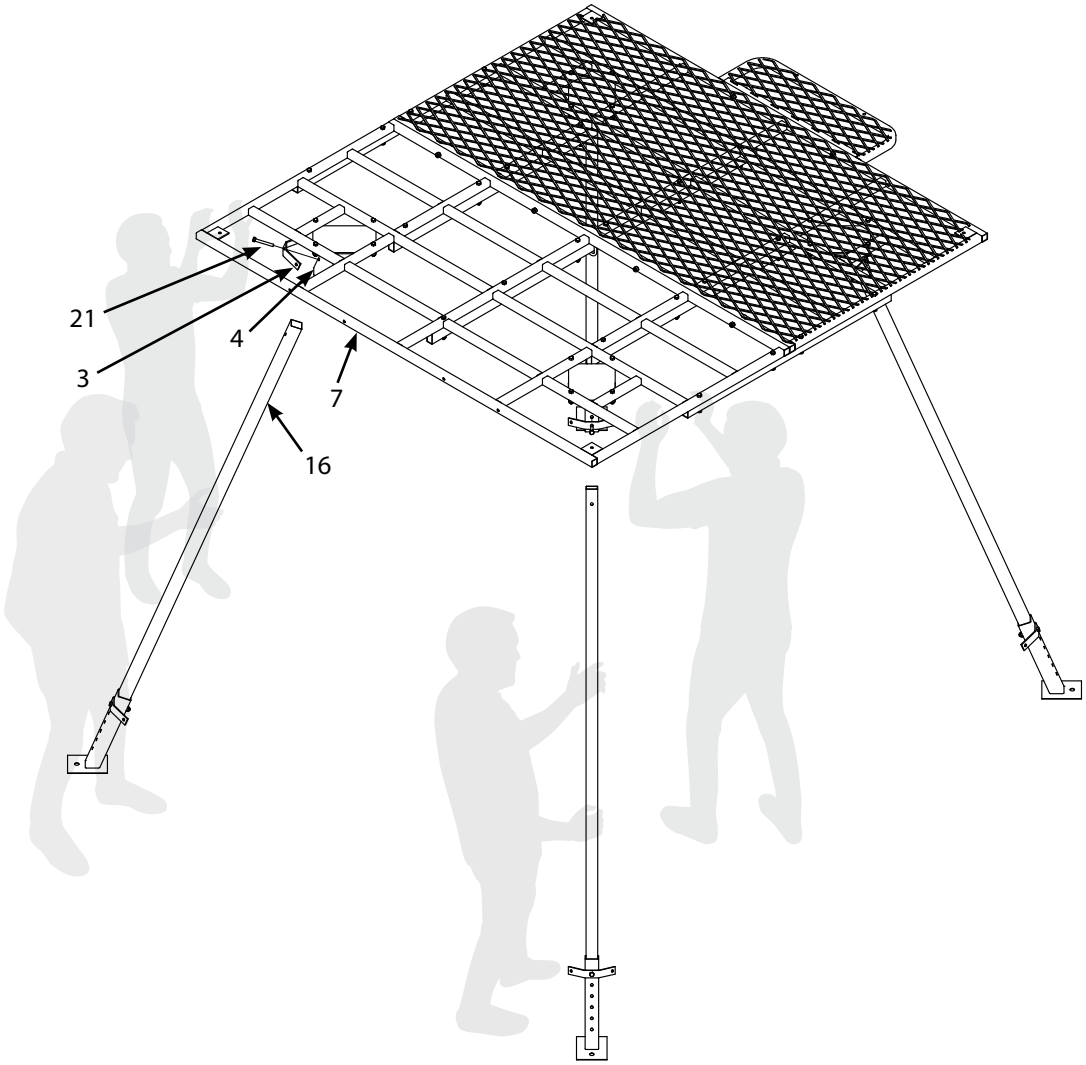

10. With the help of two people, lift rear of platform up and insert two legs (16) into leg brackets (4). Attach brace attachment bracket (3) to each leg bracket (4) and secure together using two 5/16-18 X 2-1/2 IN bolts (21) and nuts (22). Bolts must go through all components. Tighten all loose hardware securely at this time. **SEE FIGURE 8**.

FIGURE 9

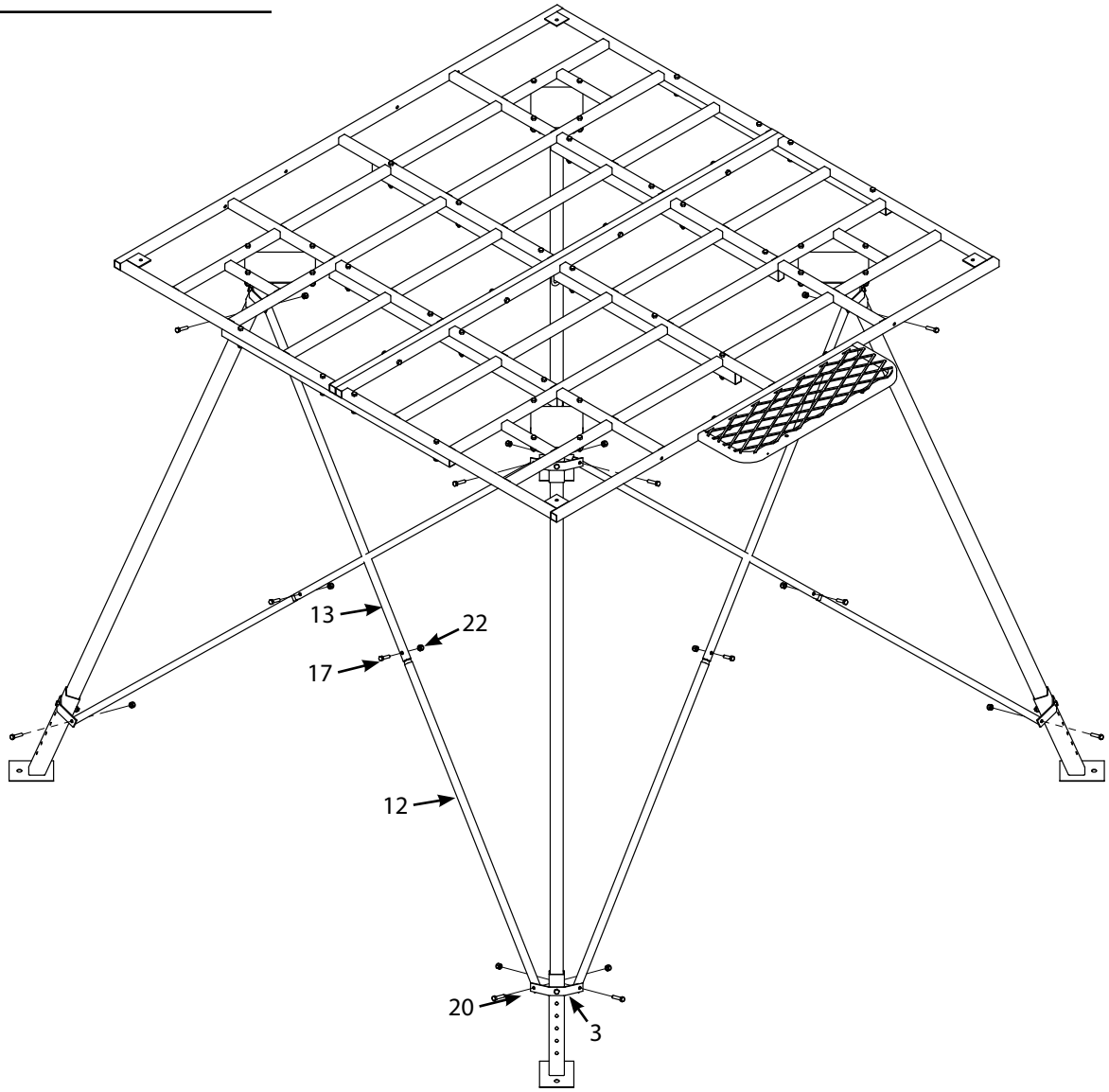

11. Attach each male angled brace (12) to a female angled brace (13) using a 5/16-18 X 1-1/4 IN bolt (17) and nut (22). You should have eight assembled braces total. **SEE FIGURE 9.**
12. Attach the assembled braces to the partially erected tower using a 5/16-18 X 1-1/2 IN bolt (20) and nut (22) on each end. Tighten all loose hardware securely at this time. **SEE FIGURE 9.**

FIGURE 10

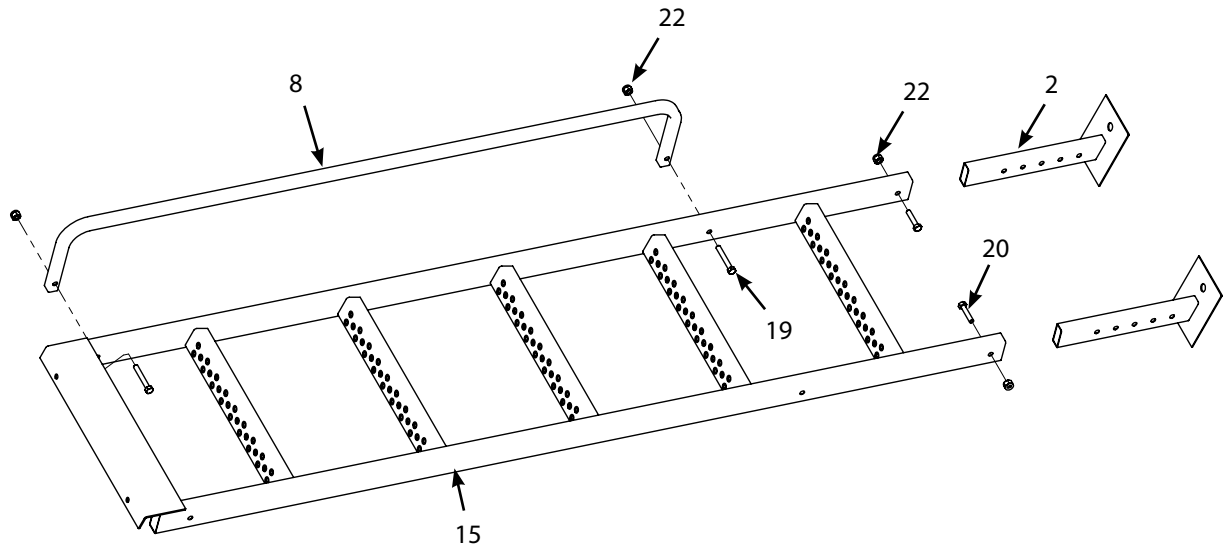

13. Assemble the ladder by inserting the two ladder feet (2) into the bottom of the ladder (15) and secure using two 5/16-18 X 1-1/2 IN bolts (20) and nuts (22). Do not tighten nuts and bolts at this time as adjustment in height may be needed later in instructions. **SEE FIGURE 10.**
14. Attach the hand rail (8) to the ladder (15) using two 5/16-18 X 2-1/4 IN bolts (19) and nuts (22). Tighten all loose hardware securely at this time. **SEE FIGURE 10.**

FIGURE 11

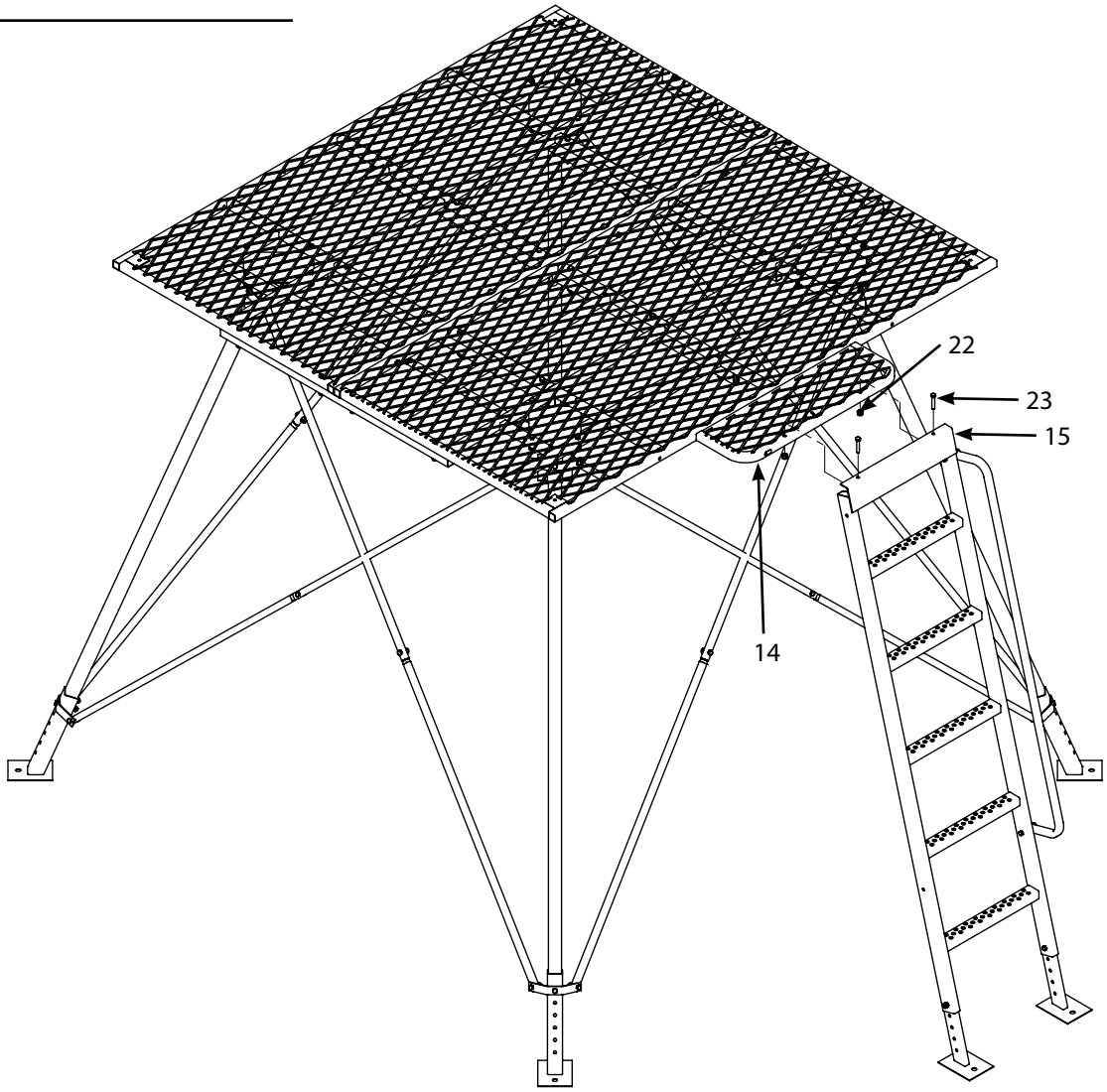

15. Attach the assembled ladder to the entry platform (14) using two 5/16-18 X 1-3/4 IN bolts (23) and nuts (22). Tighten all loose hardware securely at this time. **SEE FIGURE 11.**

FIGURE 12

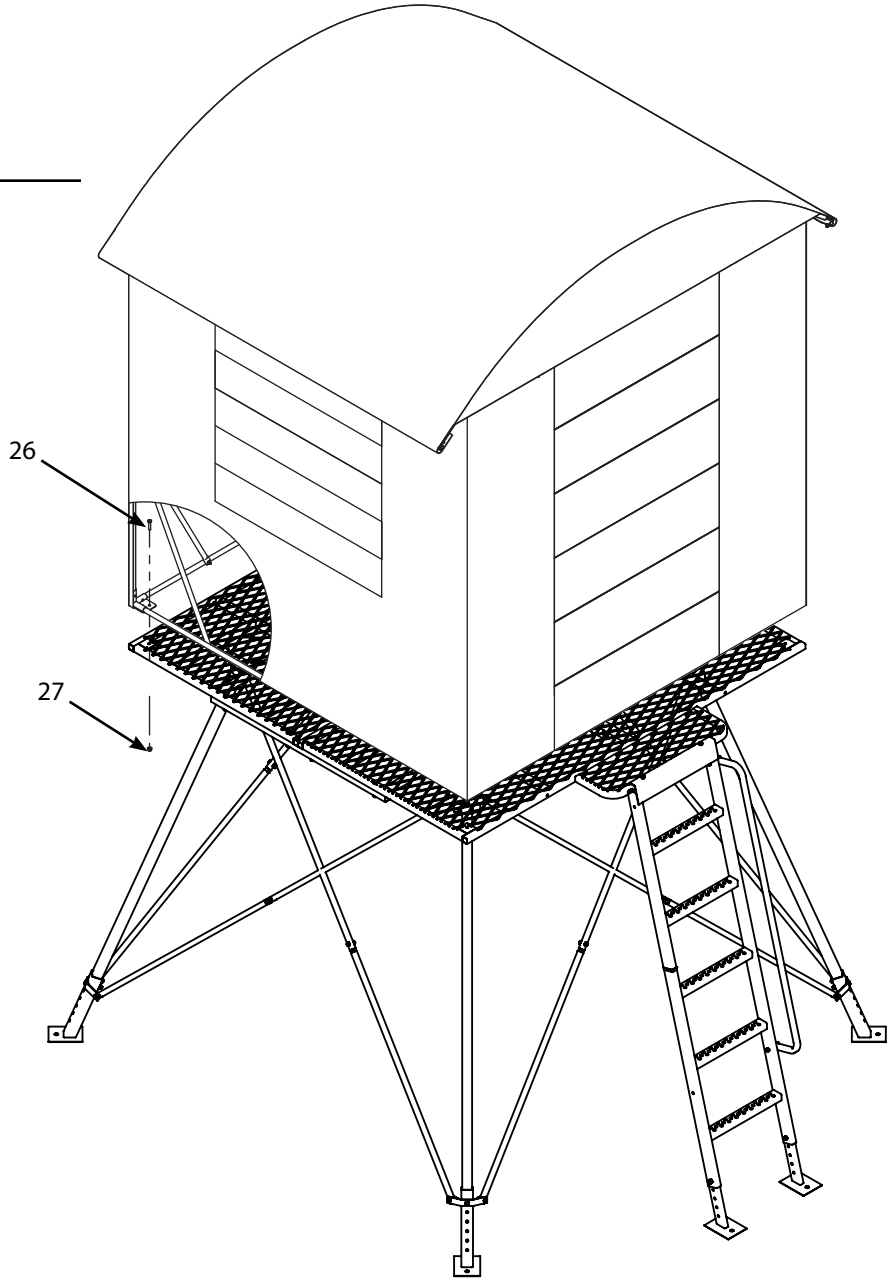

16. If you have purchased a Landmark Permanent Blind, now is the time to attach the assembled blind to the top of partially erected platform. Once Landmark Permanent Blind is properly assembled per the instructions that were provided with it, it can be lifted off the ground and set on top of the partially erected platform with the help of three other people (four total persons; one in each corner). You must make sure blind entry door is orientated on the side of platform that has the entry platform. Secure assembled blind to the platform using four 5/16-18 X 1 IN bolts (26) and nuts (27). Tighten all loose hardware securely at this time. **SEE FIGURE 12**.

FIGURE 13

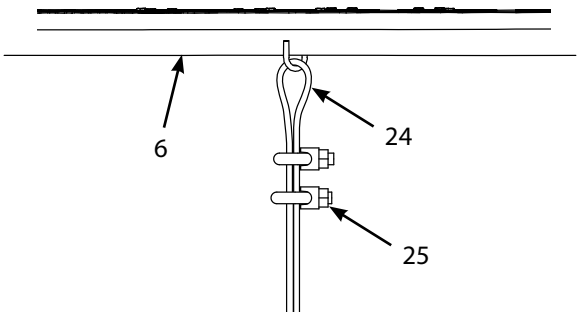

FIGURE 14

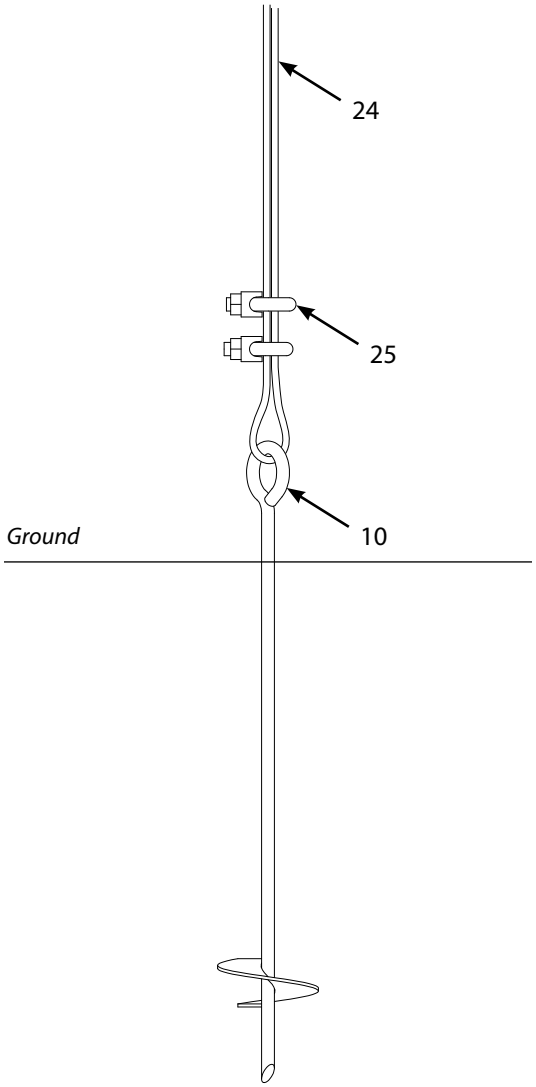

16. Attach cable (24) to center platform brace by feeding cable through welded on loop and tighten securely with two cable clamps (25). **SEE FIGURE 13.**
17. Screw the provided auger (10) into the ground at the center location, directly under center of platform, using one of the ground stakes provided as a "T" handle (through loop in end of auger).

    NOTE: Leave approximately 6" of the auger above the ground at this time.
18. Attach cable (24) and two cable clamps (25) to auger (10) by feeding cable through auger loop, pulling up on the cable end so it is tight (no slack) and tighten securely with two cable clamps. **SEE FIGURE 14.**
19. Screw the auger further into the ground until the cable is pulling down tightly on the platform.

    NOTE: DO NOT over tighten cable, damage or distortion to the platform may occur.
20. Using a hammer, drive the four provided ground stakes (9) into the ground at an angle towards the center of the quad pod. Driving them in at a similar angle as shown in Figure 15 will greatly increase how well the quad pod is secured to the ground. **SEE FIGURE 15.**

    NOTE: Drive stakes completely into ground so that the head of the stakes rests on the feet ground pads.

FIGURE 15

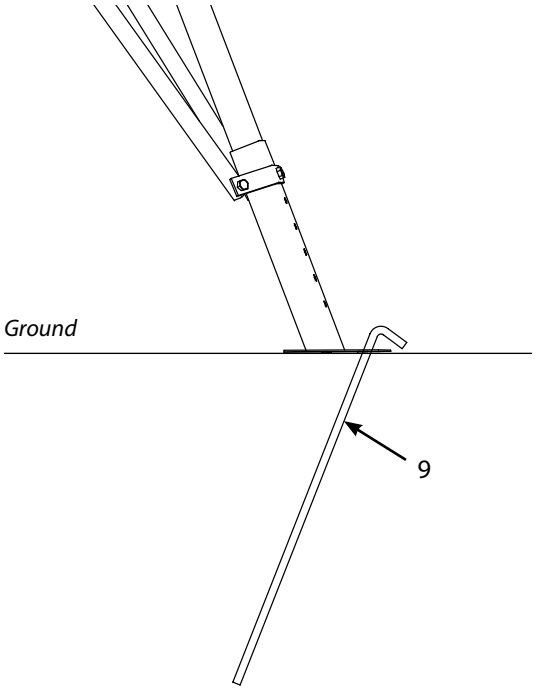

⚠ WARNING

- ⚠ Double check assembly steps to be certain you have correctly assembled this product.
- ⚠ Study your new stand to become familiar with all of its features and design. Save these instructions for future reference.
- ⚠ **Be Sure** assembly area is open, flat, level, and dry with no power lines near!
- ⚠ **Always** use at least four (4) people to install or take down a free standing platform.
- ⚠ **Do Not** use any type of motorized vehicle to upright/ assemble this free standing platform stand. You could cause unnecessary damage to this product. Upright by hand only using four people.
- ⚠ Some models include a shooting rail. **Never** lean against, lean over, or sit on shooting rail. It is designed as a shooting rest only. On models that have a non-fixed shooting rail, be sure shooting rail is flipped back or swung to the side when ascending or descending ladder.
- ⚠ Periodic tensioning of the cable/auger may be required as stand settles. Check tension each time before using stand.

⚠ WARNING

- ⚠ **Never** have two people on entry platform at the same time.
- ⚠ Be sure only one person ascends or descends ladder at a time. The entry platform is part of the ladder. Be certain first person is fully off of the ladder/entry platform and positioned safely on tower platform or ground before second person ascends or descends ladder.
- ⚠ **Never** have two people on one side of the platform. Keep weight evenly distributed on platform.
- ⚠ **Always** be aware of the other person's position. Use extreme caution when weapons are used to prevent personal injury.
- ⚠ **Always** lean forward as you climb ladder or climbing aid.
- ⚠ **Always** maintain three (3) points of contact when climbing a ladder treestand or free standing platform stand. Proper three-point contact means having either two feet with one hand or one foot with two hands on the step portion of the ladder or climbing aid at all times.
- ⚠ **Always** wear the appropriate footwear when using a free standing platform stand. A good non-slip safety boot is important to your personal safety. Be especially careful that boot laces do not get hooked on the stand or any of its components (tuck shoelaces into boots before climbing).

PARTS BREAKDOWN

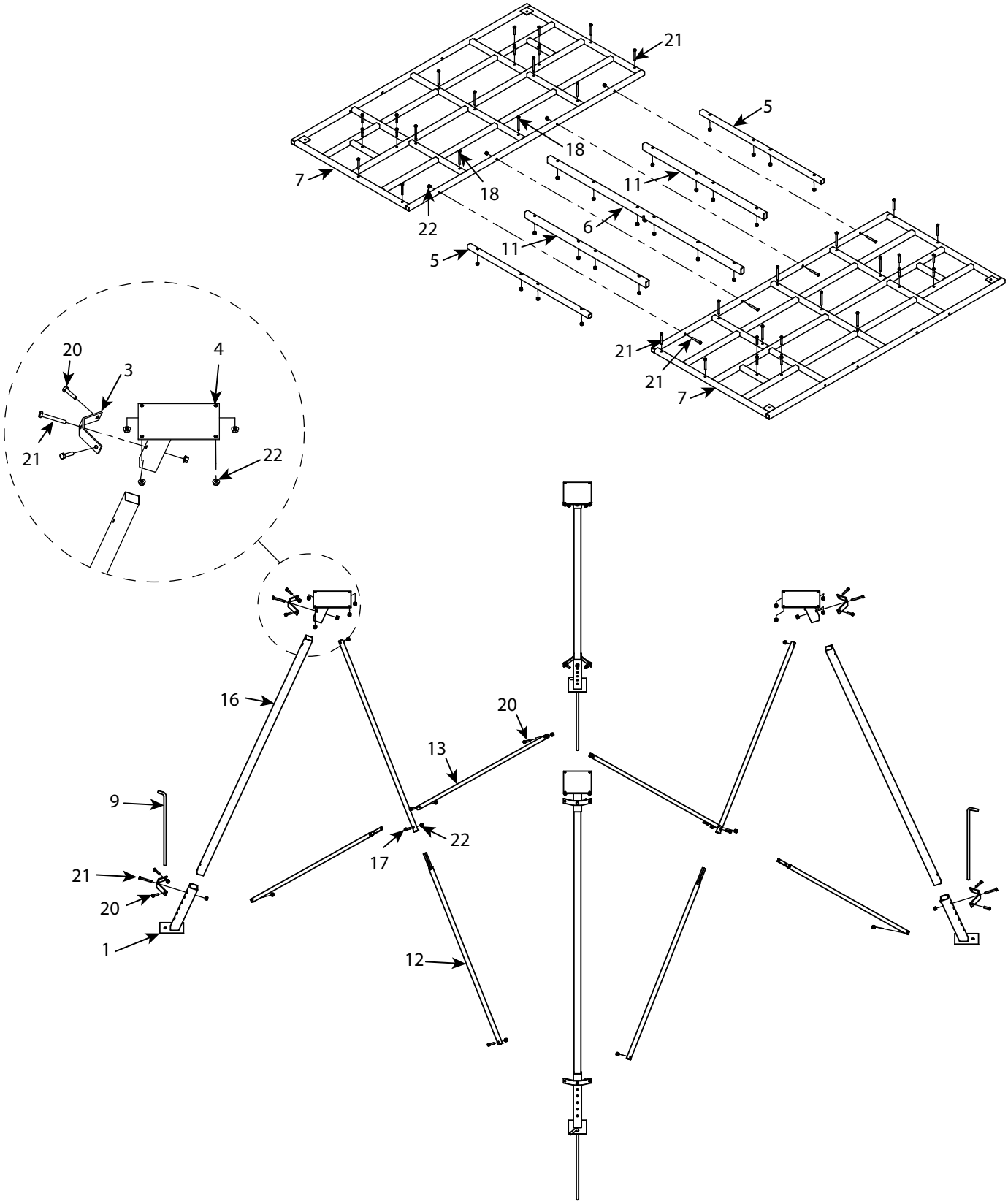

PARTS BREAKDOWN

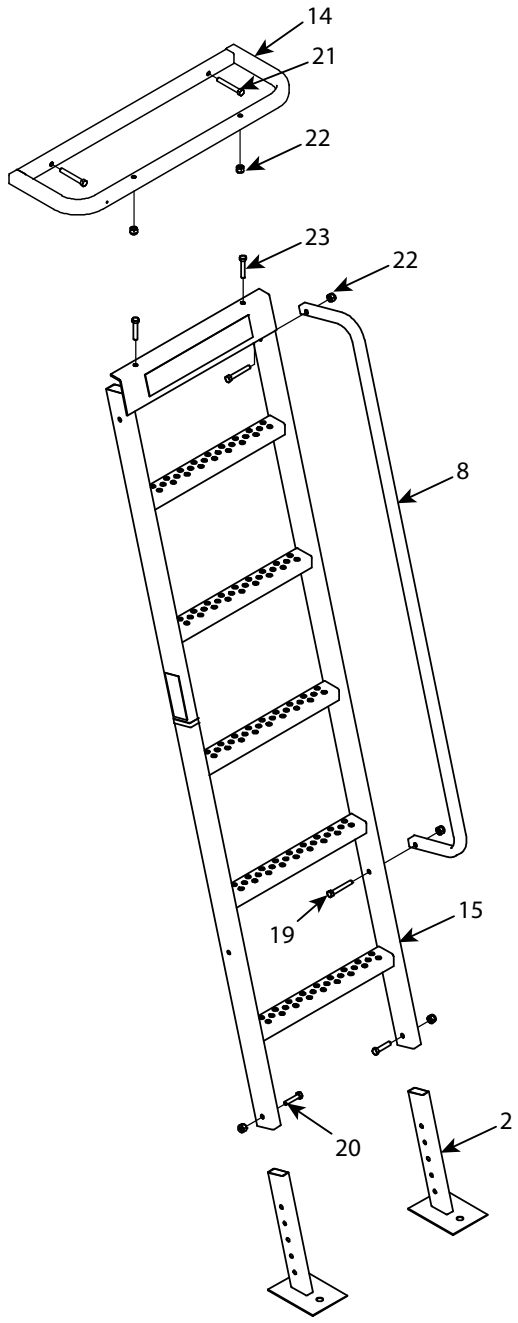

PARTS LIST

KEY #	PART #	DESCRIPTION	QTY.
1	24038	FOOT	4
2	24040	LADDER FOOT	2
3	24041	BRACE ATTACHMENT BRACKET	8
4	24049	LEG ATTACHMENT BRACKET	4
5	24050	PLATFORM BRACE	2
6	24051	PLATFORM CENTER BRACE	1
7	24056	PLATFORM	2
8	24064	LADDER HAND RAIL	1
9	24099	GROUND STAKE	4
10	24100	AUGER STAKE 24 IN	1
11	24975	PLATFORM BRACE RECTANGLE	2
12	31971	MALE ANGLED BRACE	8
13	32365	FEMALE ANGLED BRACE	8
14	32370	ENTRY PLATFORM	1
15	32380	LADDER SECTION	1
16	32384	LEG	4
17	1401B	5/16-18 X 1-1/4 IN BOLT	8
18	1926106	5/16-18 X 3-1/4 IN BOLT	14
19	27950	5/16-18 X 2-1/4 IN BOLT	2
20	48152	5/16-18 X 1-1/2 IN BOLT	18
21	53730B	5/16-18 X 2-1/2 IN BOLT	22
22	60G5NYB	5/16-18 NUT	82
23	8655B	5/16-18 X 1-3/4 IN BOLT	18
ITEMS NOT SHOWN			
24	24103	TIE DOWN CABLE	1
25	48650	1/8 IN CABLE CLAMP	4
ITEMS USED FOR BLIND ATTACHMENT (NOT SHOWN)			
26	29866	5/16-18 X 1 IN BOLT	4
27	60G5NYB	5/16-18 NUT	4

NOTES

NOTES

LANDMARK™
PERMANENT BLINDS
RIVERS EDGE®

WE ARE HUNTERS

Rivers Edge® Treestands, Inc.
1160 Eighth Avenue, PO Box 755
Cumberland, WI 54829

Phone: 800-450-EDGE (3343)
Fax: 715-822-2124
www.HuntRiversEdge.com

*All weights, specifications and features are approximate and are subject to change without notice. Due to continuous product improvements, product images may not be exact. Warning labels in some product images may have been removed for photography purposes only. Props shown in photos not included. Some assembly may be required.