PRODUCT MEETS INDUSTRY STANDARDS RECOGNIZED BY

TMA®

PARTICIPATING MEMBER

GAME WINNER™

Instruction Manual

QUAD-POD 2.0 HUNTING STAND

MODEL #: PL400GW
STYLE #: 158220

Maximum Height

11′ 3″ to shooting rail

Maximum Field Rating

500 lbs
(300 lbs per person max)

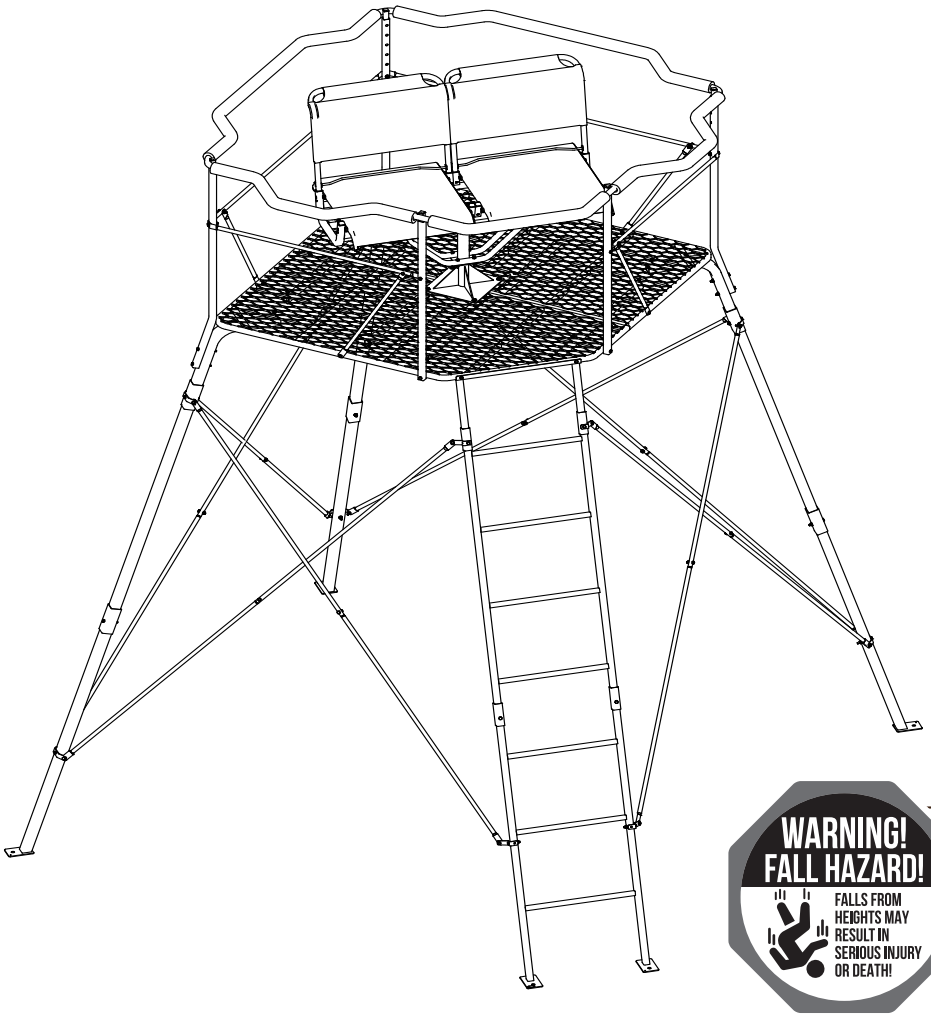

WARNING! FALL HAZARD!

FALLS FROM HEIGHTS MAY RESULT IN SERIOUS INJURY OR DEATH!

Watch video before using.

standsafety.com/r5

TRIPOD STAND SAFETY

For parts call our Customer Service Center at 800-450-3343
Business Hours: 8:00 am to 5:00 pm CST | info@huntriversedge.com

© 2021 RETI All Rights Reserved | 32190 REV4: 03/25/2021

TABLE OF CONTENTS PAGE

Warranty Information 2
Warnings 3-4
Parts List 5-9
Hardware/Small Parts List 10-11
Tools Required 12
Product Diagrams 12-15
Finished Tower 16
Assembly Instructions 17-27
Inspections and Maintenance 28
Notes Page 29-31

Note: Before beginning assembly of product, make sure all parts are present. Compare parts list with package and hardware contents. If any part is missing or damaged do not attempt to assemble the unit. Contact customer service for replacement parts.

WARRANTY

RETI offers a **one year warranty** for all components of the treestand. These warranties apply to the original owner with a proof of purchase. These warranties begin on the date of purchase by the first retail consumer and continue for the period specified above. These warranties apply to products that are not modified, abused or used in a manner that deviates from the product's intended usage. Minor fading in color is normal and is not covered by warranty. Any corrosion of painted surfaces that occurs as a result of paint being removed or damaged is also not covered by warranty. RETI offers no other warranty expressed or implied. Products for which warranty work has been approved must be sent directly to RETI and performed by RETI. **To obtain warranty service and/or replacement instructions, you must obtain prior approval from RETI before shipping your package to us by calling our customer service department at 800-450-3343 or by writing to: RETI, P.O. Box 755, 1160 Eighth Avenue, Cumberland, WI 54829 for a return material authorization number (RMA#).** All items must be shipped prepaid. RETI will, at no charge, repair or replace, in RETI's sole discretion, any product that satisfies the conditions stated above. RETI retains the right to change models, specifications and price without notice.

This equipment has been manufactured under strict quality and safety guidelines. As with any equipment of this type, full understanding of the instructions and its use is mandatory and imperative for the safety of its user. RETI is not responsible for any damages or injuries sustained due to improper use or modification of any of its products, or resulting from any use which deviates from the product's intended usage. RETI is not responsible for any injuries sustained due to failure to read and adhere to the instructions for use. Any misunderstanding or questions regarding the products of their use should be directed to RETI prior to any use. It is the owner's sole responsibility to inspect the product regularly for damage, improper installation, or conditions that could jeopardize the ultimate safety of the product. **Owner is responsible to understand and follow product field weight rating and must never exceed maximum weight rating.** RETI is not responsible for any malfunction or injury resulting from normal wear and tear, damage caused by improper use, improper maintenance, negligence or accidents. This product, if used safely as intended, will provide trouble free service for the useful life of the product. We hope you will enjoy the quality of our products for years to come, and have a safe hunt.

STOP READ AND UNDERSTAND THE FOLLOWING WARNINGS BEFORE ASSEMBLY

MODEL PL400GW

MAXIMUM USE HEIGHT - 11' 3" TO SHOOTING RAIL

MAXIMUM OCCUPANCY - TWO (2) PEOPLE

TOTAL WEIGHT LIMIT - 500 LB (300 LB PER PERSON MAX)

WARNING

This product carries strict height and weight restrictions.

- **Do Not** use this product if you exceed the total weight limit. Please note that the total weight limit includes the user(s) and their equipment.

WARNING

- **When hunting from a treestand or free standing platform stand falls can occur any time after leaving the ground causing injury or death.**
- **Read and understand** all of the manufacturer's Warnings and Instructions and use all safety devices provided by the manufacturer. Contact the manufacturer for any questions. Failure to do so could result in injury or death.
- **Never** exceed the total weight limit of the treestand or free standing platform stand.
- **Never** use a treestand or free standing platform stand during inclement weather such as rain, lightning, windstorms or icy conditions and end your hunt and return to the ground if inclement conditions arise.
- **Never** use a treestand or free standing platform stand while using drugs (even prescription drugs) or alcohol.
- **Never** use a treestand or free standing platform stand while feeling ill, nauseous or dizzy, or if you have a prior medical condition that could cause a problem, that is, heart condition, joints that lock-up, spinal fusions, etc., or if you are not well rested. **Never** sleep in stand.
- **Always** avoid electrical power lines.
- **Never** rely on a tree branch for support.
- **Never** jump or bounce on a treestand or free standing platform stand to seat it to the tree or ground.
- Pull up a bow, backpack, or firearm or other equipment only after being secure in the treestand or free standing platform stand and a firearm must be pulled up with it unloaded, chamber open, and muzzle down.
- **Always** inform someone of the hunting location, where the treestand or free standing platform stand will be located and the expected duration of the hunt.

WARNING

- A signal device such as a mobile phone, radio, whistle, signal flare or personal locator device (PLD) must be on your person and readily available at all times.
- Inspect the treestand or free standing platform stand and all safety devices each time before use and **Do Not** store a treestand or free standing platform stand outdoors when not in use.
- **Never** modify your treestand or free standing platform stand in any way by making repairs, replacing parts, or altering it except if explicitly authorized in writing by the manufacturer.
- Practice installing, adjusting and using your treestand or free standing platform stand at ground level prior to using it at elevated positions. Study your new stand to become familiar with all of its features and design. Doing so will confirm that the product is manufactured, assembled and installed correctly.
- Instructions (written and video) shall be kept in a safe place and reviewed at least annually. It is the responsibility of the treestand or free standing platform stand owner to furnish the complete instructions to any person who borrows or purchases the treestand or free standing platform stand.
- **Always** use at least four (4) people to install or take down a free standing platform stand.
- Stabilization devices must be attached before climbing to the platform.
- When installing a ladder stand or free standing platform stand, always bounce on the first rung to set the ladder into the ground according to manufacturer's instructions before proceeding to climb any higher.
- Check every ladder/leg section connection every time you use the stand before you leave the ground. If ladder/leg sections are separating, do not use the stand.
- Check the ground under the stand to make sure it is firm and level. Sloping ground or uneven surface (one side on a rock) can cause your ladder or free standing platform stand to tilt or shift off as you climb.
- **Always** maintain three (3) points of contact when climbing a ladder treestand or free standing platform stand. Proper three-point contact means having either two feet with one hand or one foot with two hands on the step portion of the ladder or climbing aid at all times.
- **Always** lean forward as you climb ladder or climbing aid.
- **Never** exceed the stated maximum use height.

STOP READ AND UNDERSTAND THE FOLLOWING WARNINGS BEFORE SETUP AND USE

⚠ WARNING

- **Do Not** use this product until you have watched the safety video, understand it, and practiced the techniques for safe hunting discussed in this video. The video can be found with the QR code and/or URL shown on front cover of this manual.
- Read and perform all inspection and maintenance tasks before each and every use. Replace any questionable components immediately with RETI original replacement parts.
- **Do Not** crush tubing when tightening bolt assemblies! Identify and familiarize yourself with all parts before you start. Bolt identification chart can be found in the back.
- Double check assembly steps to be certain you have correctly assembled this product.
- **Never** use any product that has not been maintained or inspected properly - Your life depends on it!
- **Always** wear the appropriate footwear when using a free standing platform stand. A good non-slip safety boot is important to your personal safety. Be especially careful that boot laces do not get hooked on the stand or any of its components (tuck shoelaces into boots before climbing).
- Do not position this product on a slope, unlevel, or wet ground. It may tip over and serious injury or death may occur.
- Ground must be free of rocks and debris so stakes can be driven into ground through holes provided in foot pads. This will help prevent tower from tipping over in strong winds.
- Contacting buried utilities may result in serious injury or death! Before digging always call 811 or you local One-Call system to prevent person injury, interruption of service, environmental accidents or project delays.
- Heavy product, **Always** use at least four (4) people to install or take down a free standing platform stand. **Do Not** let someone with a history of back problems help.

⚠ WARNING

- Be sure only one person ascends or descends ladder at a time. Be certain first person is fully off of the ladder and positioned safely on tower platform or ground before second person ascends or descends ladder.
- **Never** have two people on one side of the platform. Keep weight evenly distributed on platform.
- **Always** be aware of the other person's position. Use extreme caution when weapons are used to prevent personal injury.
- **Always** lean forward as you climb ladder or climbing aid.
- **Always** maintain three (3) points of contact when climbing a ladder treestand or free standing platform stand. Proper three-point contact means having either two feet with one hand or one foot with two hands on the step portion of the ladder or climbing aid at all times.
- **Always** wear the appropriate footwear when using a free standing platform stand. A good non-slip safety boot is important to your personal safety. Be especially careful that boot laces do not get hooked on the stand or any of its components (tuck shoelaces into boots before climbing).

⚠ WARNING

- Double check assembly steps to be certain you have correctly assembled this product.
- Study your new stand to become familiar with all of its features and design. Save these instructions for future reference.
- **Be Sure** assembly area is open, flat, level, and dry with no power lines near!
- **Always** use at least four (4) people to install or take down a free standing platform.
- **Do Not** use any type of motorized vehicle to upright/ assemble this free standing platform stand. You could cause unnecessary damage to this product. Upright by hand only using five people.
- Some models include a shooting rail. **Never** lean against, lean over, or sit on shooting rail. It is designed as a shooting rest only. On models that have a non-fixed shooting rail, be sure shooting rail is flipped back or swung to the side when ascending or descending ladder.

PARTS LIST

Item	Part No.	Description	Image	Qty
1	# 32122	CROSS BRACE MALE	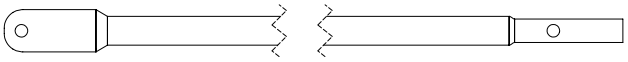	8
2	# 32146	FRONT PLATFORM	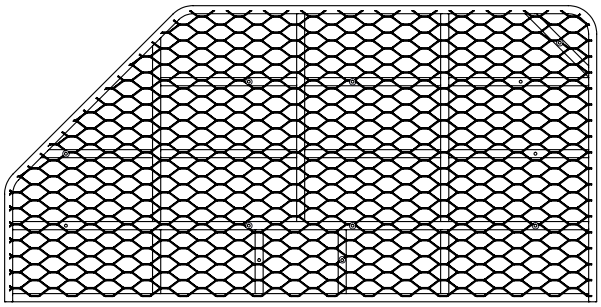	1
3	# 32149	REAR PLATFORM	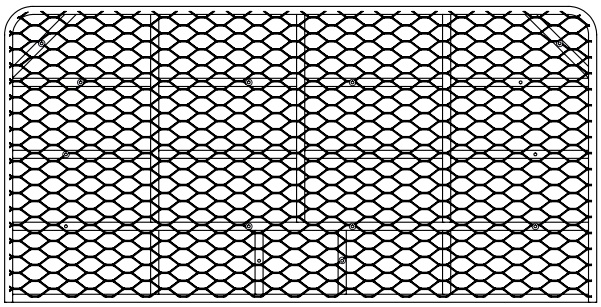	1
4	# 32153	PLATFORM BRACE LONG		2
5	# 32154	PLATFORM BRACE SHORT	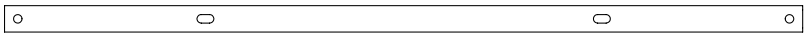	2
6	# 32156	LEG TO PLATFORM ATTACHMENT	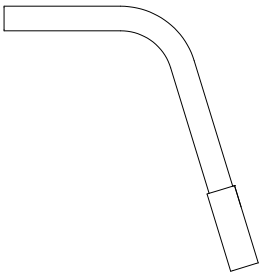	3

Item	Part No.	Description	Image	Qty
7	# 32157	TOP LEG		3
8	# 32158	BOTTOM LEG	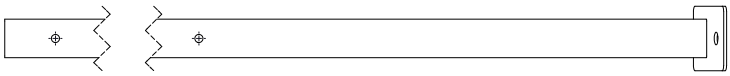	3
9	# 32163	LADDER TO PLATFORM ATTACHMENT	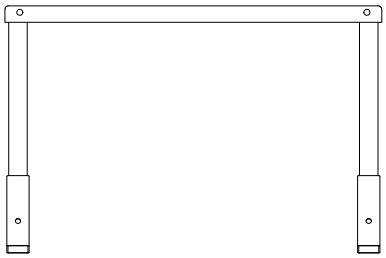	1
10	# 32166	ANGLED BRACE 56 IN	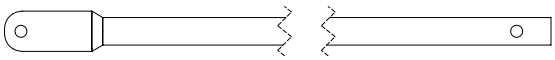	4
11	# 32167	ANGLED BRACE 47 IN	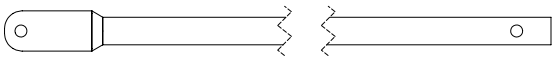	2
12	# 32168	ANGLED BRACE 44 IN	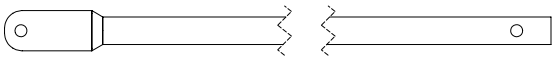	2
13	# 32172	SHOOTING RAIL LONG	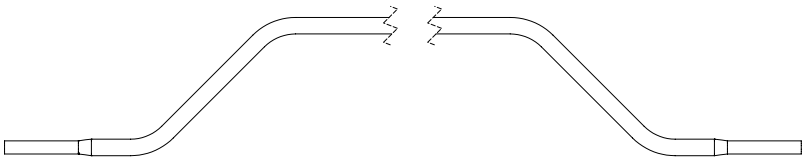	2
14	# 32173	SHOOTING RAIL SHORT	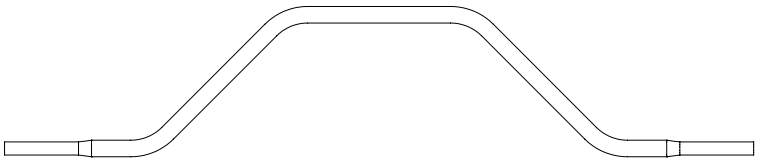	2
15	# 32176	VERTICAL SUPPORT BRACE ANGLED	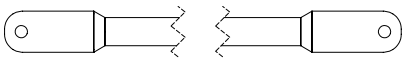	4
16	# 32177	VERTICAL SUPPORT BRACE LONG	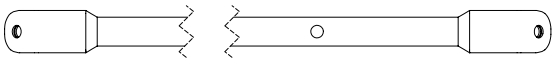	2

Item	Part No.	Description	Image	Qty
17	# 32178	VERTICAL SUPPORT BRACE SHORT	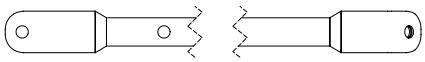	2
18	# 32304	SEAT POST TOP	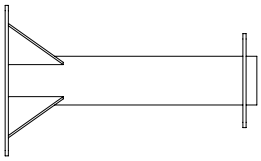	1
19	# 32307	SEAT POST BOTTOM	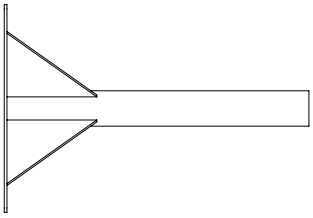	1
20	# 32332	SEAT FRAME 2-MAN SWIVEL	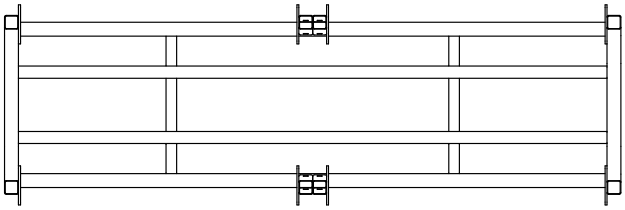	1
21	# 32339	SEAT ASSEMBLY	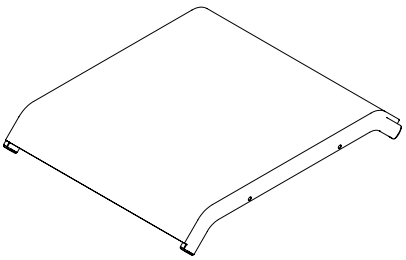	2
22	# 32344	VERTICAL SUPPORT ENTRY	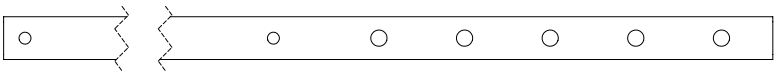	2
23	# 32345	VERTICAL SUPPORT CORNER	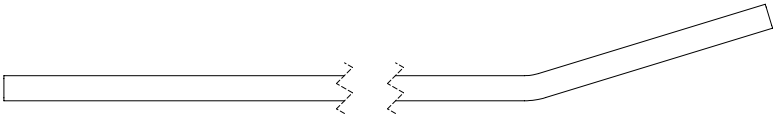	3

Item	Part No.	Description	Image	Qty
24	# 32359	BACKREST	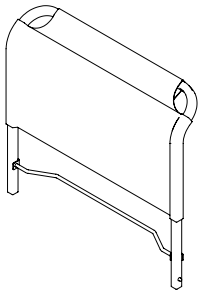	2
25	# 32363	SHOOTING RAIL HUB	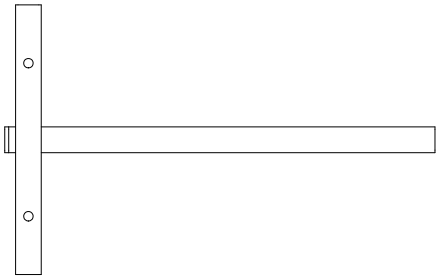	2
26	# 32364	SHOOTING RAIL CORNER HUB	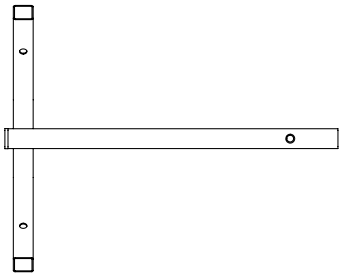	3
27	# 32542	LADDER TOP	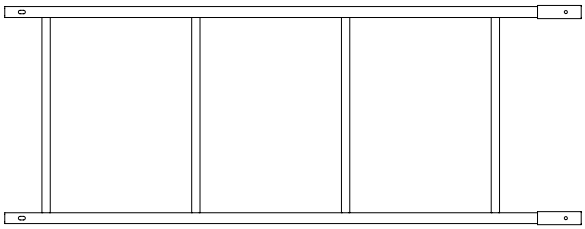	1
28	# 32544	LADDER BOTTOM	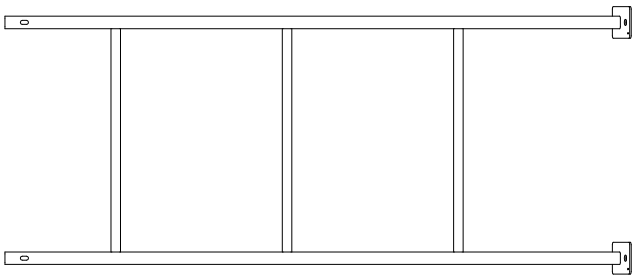	1

Item	Part No.	Description	Image	Qty
29	# 32565	SEAT BRACE ANGLED	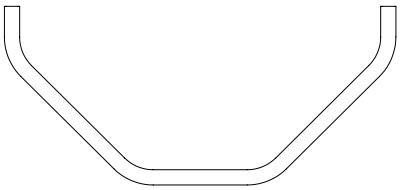	2
30	# 33341	SHOOTING RAIL ENTRY	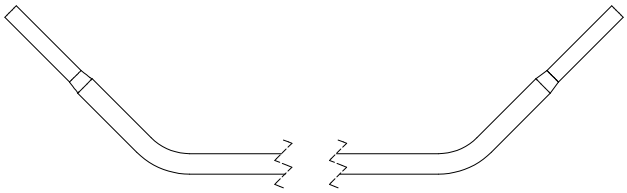	1
31	# 32287	GROUND STAKE		5
32	# 32244	SLEEVE W/ FOAM 58 IN	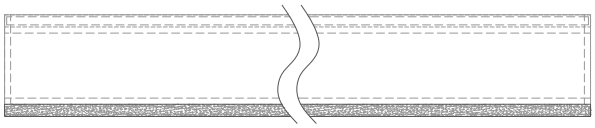	2
33	# 32245	SLEEVE W/ FOAM 38 IN	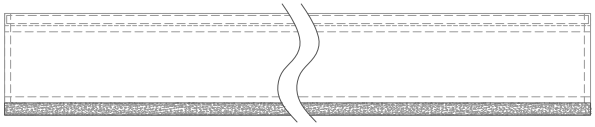	2
34	# 32246	SLEEVE W/ FOAM 25 IN	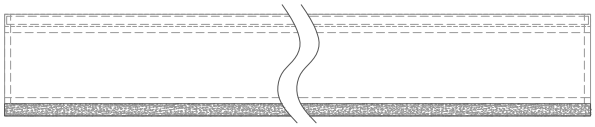	1

HARDWARE LIST (TO SCALE)

Item	Part No.	Description	Image	Qty
35	# 48153B	BOLT 1/4-20 X 2 IN		4
36	# 48240B	BOLT 1/4-20 X 1-1/2 IN	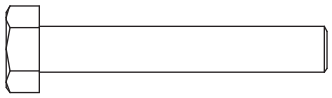	19
37	# 48250B	BOLT 1/4-20 X 1-3/4 IN		26
38	# 48271B	BOLT 1/4-20 X 2-1/4 IN	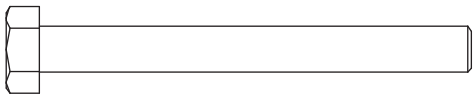	31
39	# 48280B	BOLT 1/4-20 X 3 IN	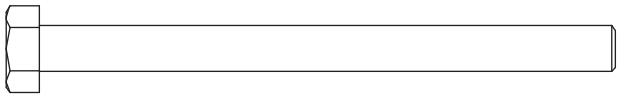	12
40	# 63282	BOLT 1/4-20 X 1 IN		8
41	# 8909B	BOLT 1/4-20 X 1-1/4 IN	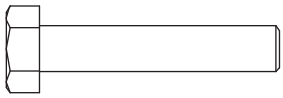	14
42	# 8930B	BOLT 1/4-20 X 3/4 IN		16
43	# 48261B	WASHER 1/4 IN	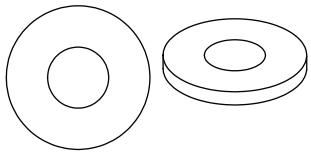	28
44	# 48752B	NUT 1/4-20	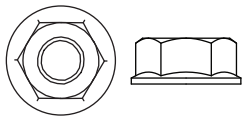	130

SMALL PARTS LIST (NOT TO SCALE)

Item	Part No.	Description	Image	Qty
45	# 29713	19 MM SQUARE PLUG	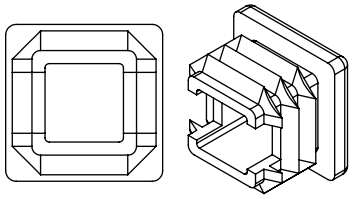	4
46	# 32231	SEAT POST PLUG	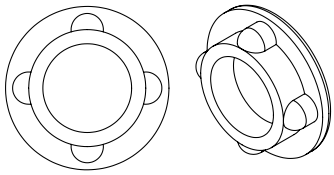	1
47	# 32337	INSERT BACKREST	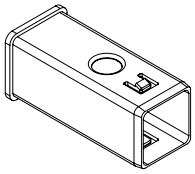	8
48	# 32336	INSERT ROOF POLE (NOT SHOWN)	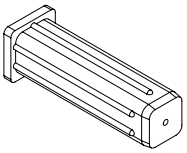	5
49	# 32169	BRACKET BRACE TO LEG ATTACHMENT	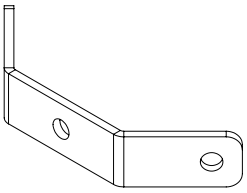	6
50	# 32170	BRACKET BRACE TO LADDER ATTACHMENT	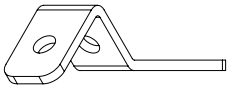	4

TOOLS REQUIRED (INCLUDED)

Item	Part No.	Description	Image	Qty
-	# 32563	7/16" WRENCHES	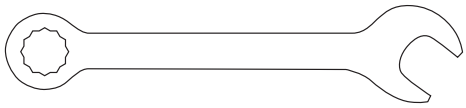	2

PRODUCT DIAGRAM - PLATFORM

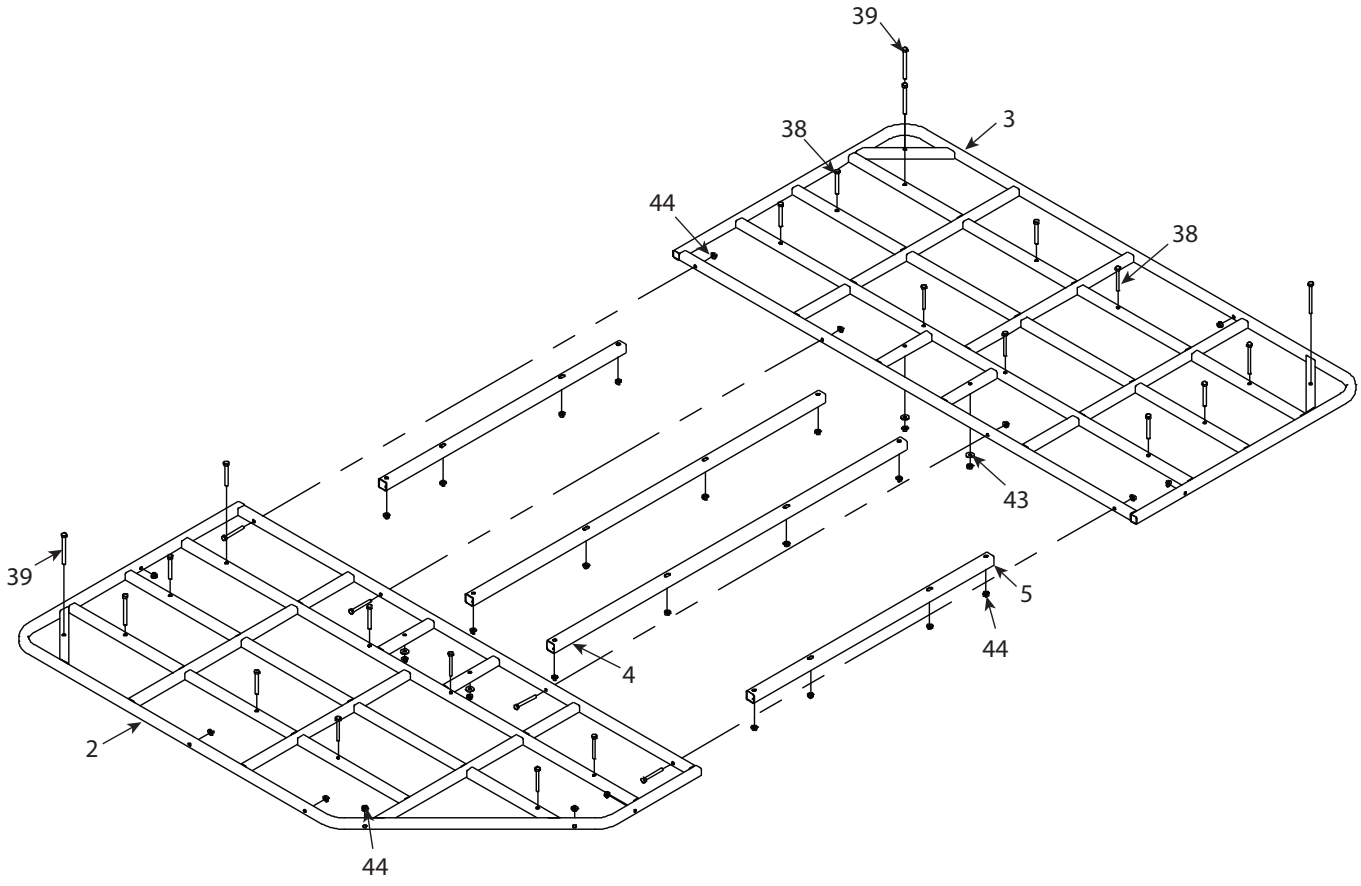

PRODUCT DIAGRAM - TOWER LEGS

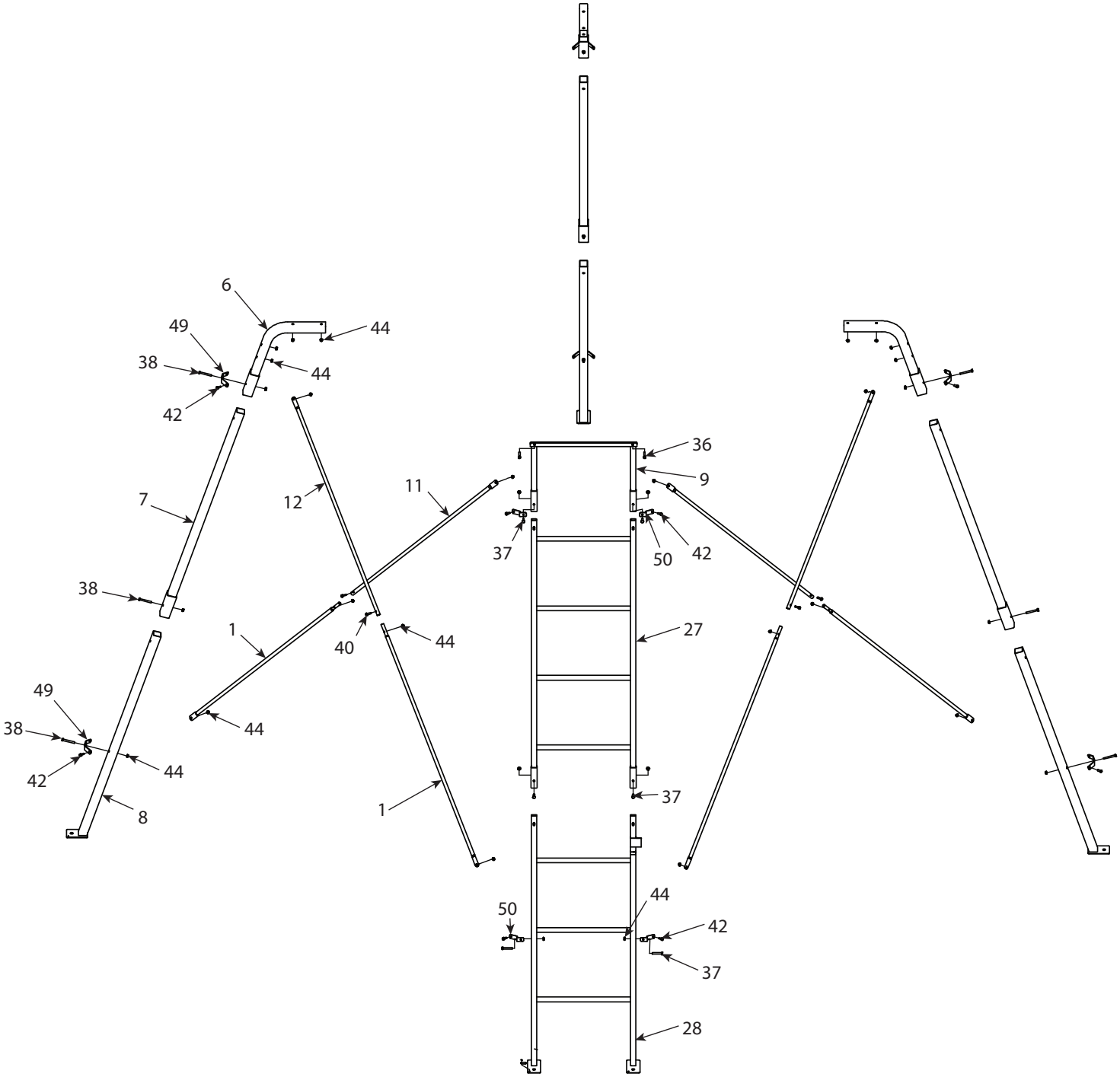

PRODUCT DIAGRAM - SHOOTING RAIL

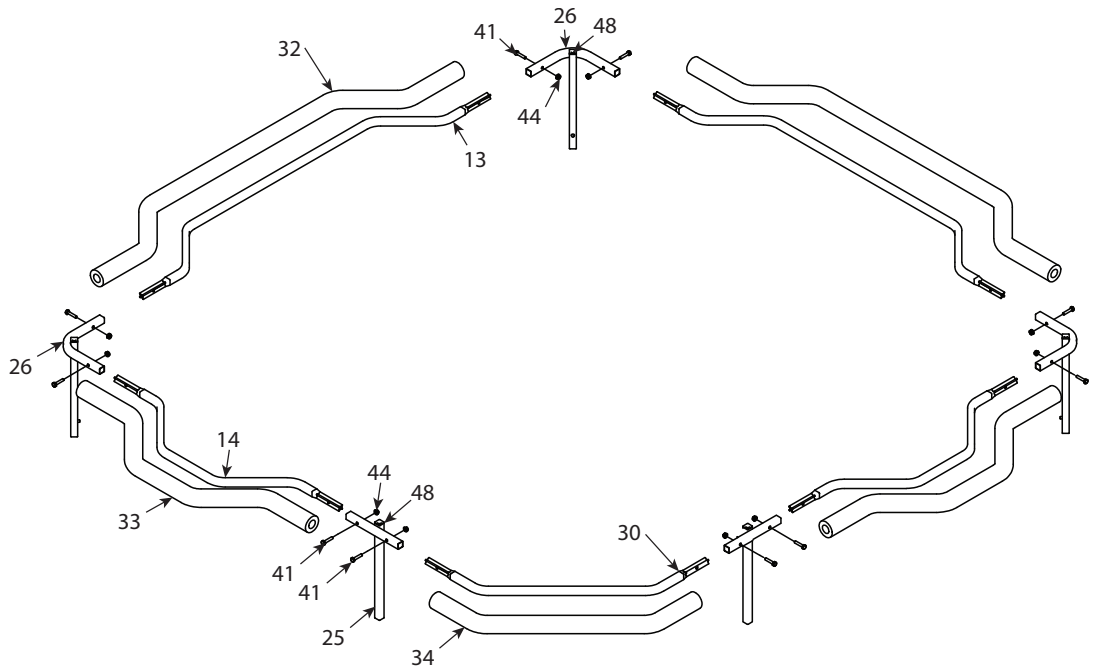

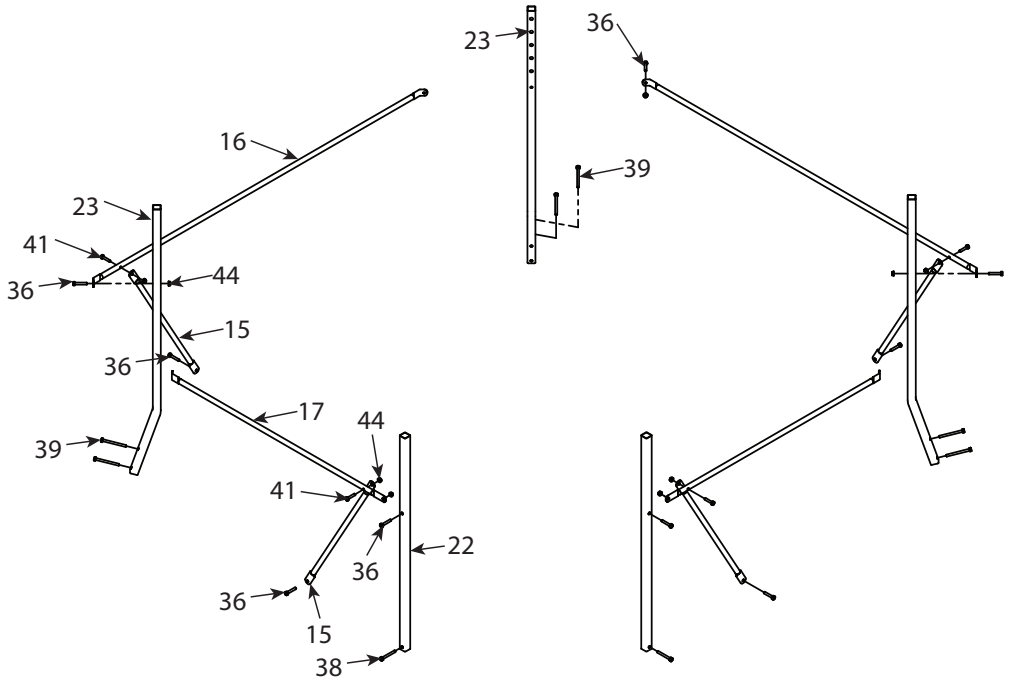

PRODUCT DIAGRAM - SEAT

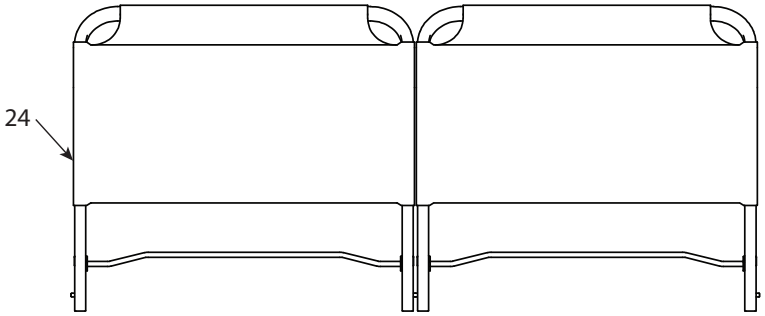

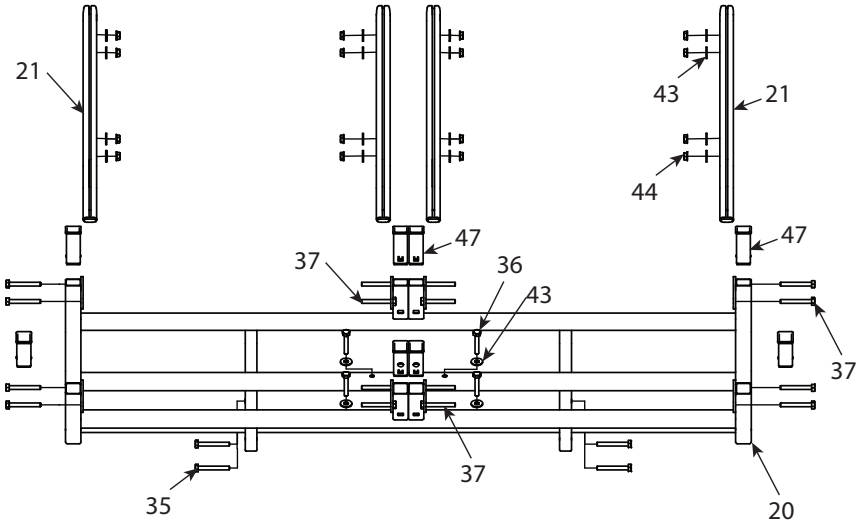

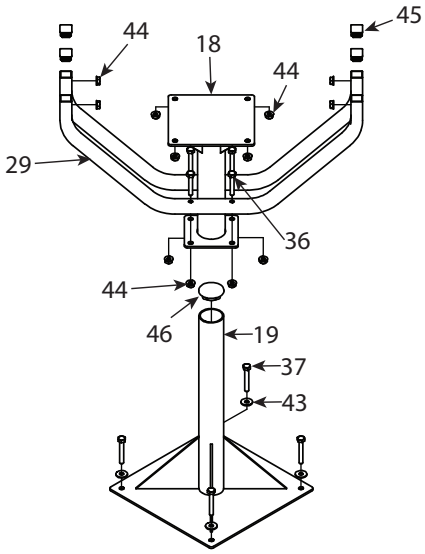

FINISHED TOWER

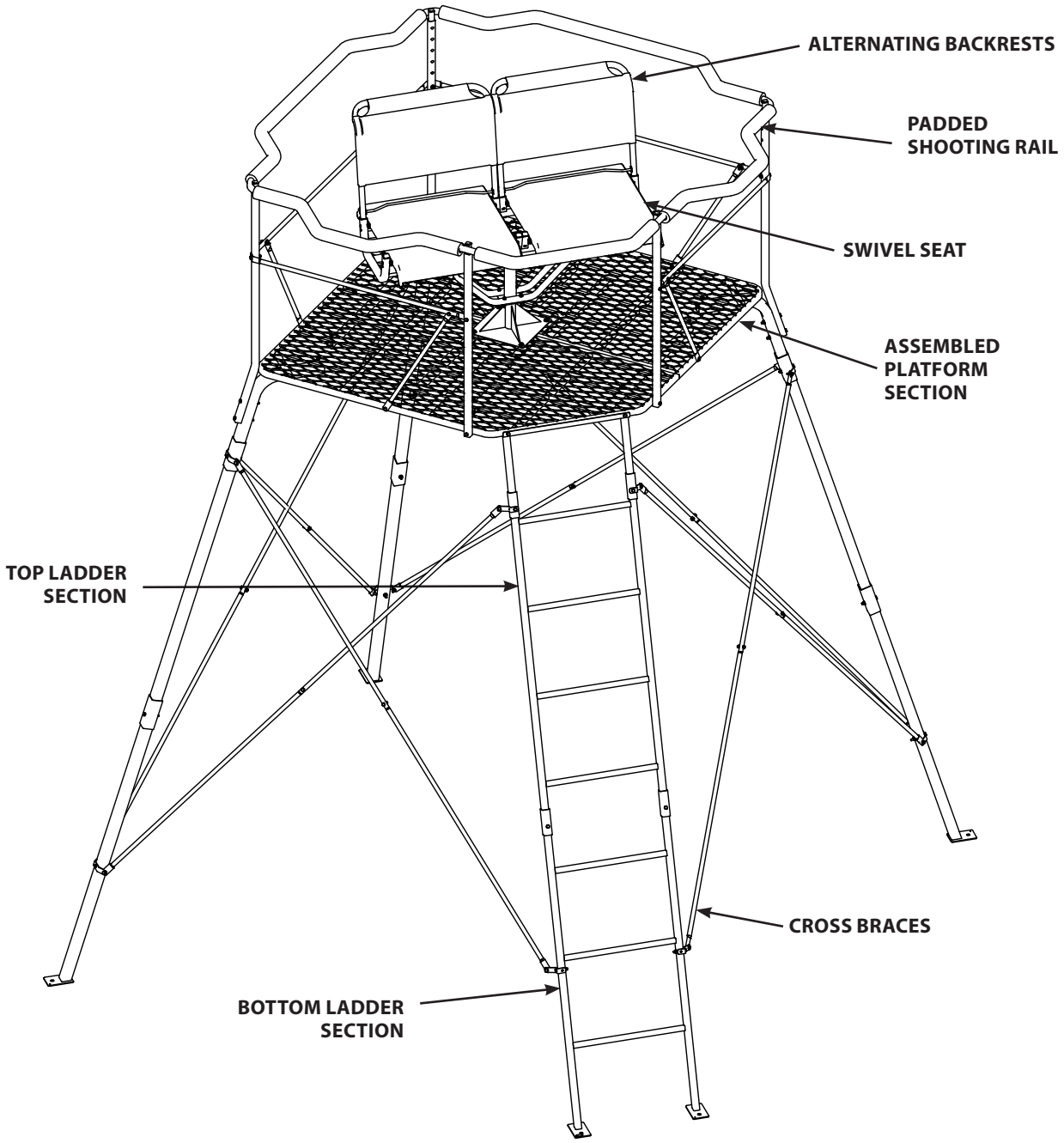

Do not remove labels/warnings from product, they are there for your safety.

Recommended for adult use only.

ASSEMBLY INSTRUCTIONS

Do not tighten any nut and bolt combinations completely until instructions indicate to. Finger tighten plus one turn of a wrench only! This will temporarily hold the locknut on the bolt while helping alignment of all parts!

STEP 1

1. Attach the two long platform braces (4) to the bottom of the rear platform (3) using two 1/4-20 X 2-1/4 IN bolts (38) and 1/4-20 nuts (44) for each brace. **SEE FIGURE 1.**

   Attach the two short platform braces (5) to the bottom of the rear platform (3) using two 1/4-20 X 2-1/4 IN bolts (38) and 1/4-20 nuts (44) for each brace. **SEE FIGURE 1.**

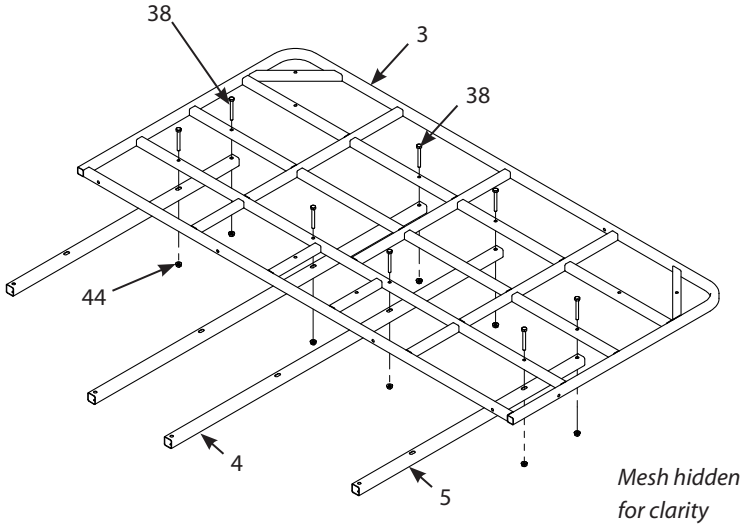

FIGURE 1

STEP 2

2. Attach the front platform (2) to all four platform braces (4, 5) using two 1/4-20 X 2-1/4 IN bolts (38) and 1/4-20 nuts (44) for each brace. **SEE FIGURE 2.**

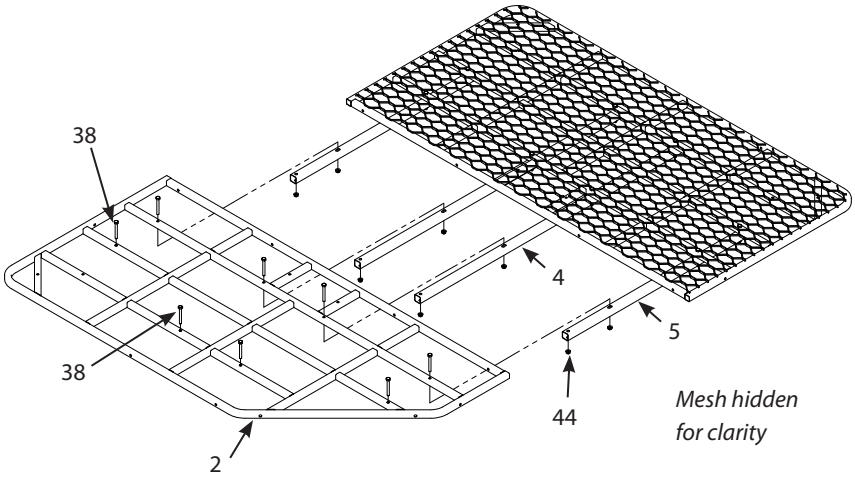

FIGURE 2

STEP 3

3. Secure the two platforms (2, 3) together using four 1/4-20 X 2-1/4 IN bolts (38) and 1/4-20 nuts (44). **SEE FIGURE 3.** ***Securely tighten all loose hardware at this time.***

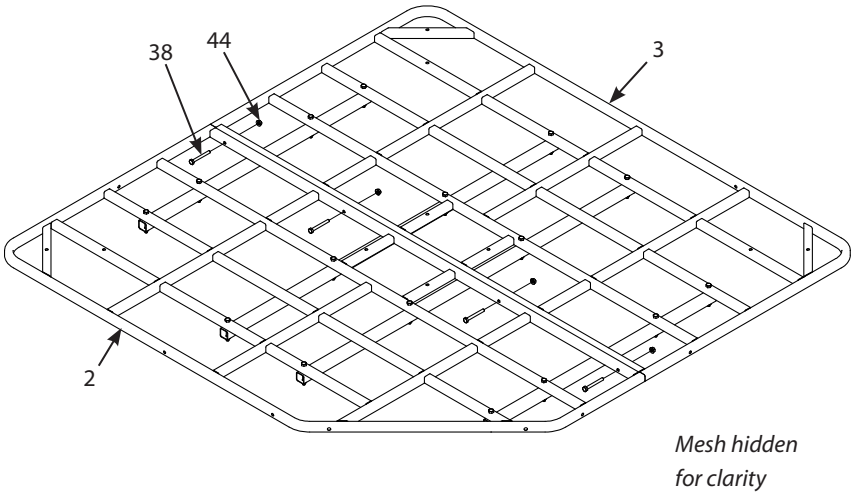

FIGURE 3

STEP 4

4. Attach the three leg-to-platform attachment parts (6) to the assembled platform using two 1/4-20 X 3 IN bolts (39) and 1/4-20 nuts (44) for each part. **SEE FIGURE 4.**

   Attach the ladder-to-platform attachment part (9) to the assembled platform using two 1/4-20 X 1-1/2 IN bolts (36) and 1/4-20 nuts (44). **SEE FIGURE 4.** ***Securely tighten all loose hardware at this time.***

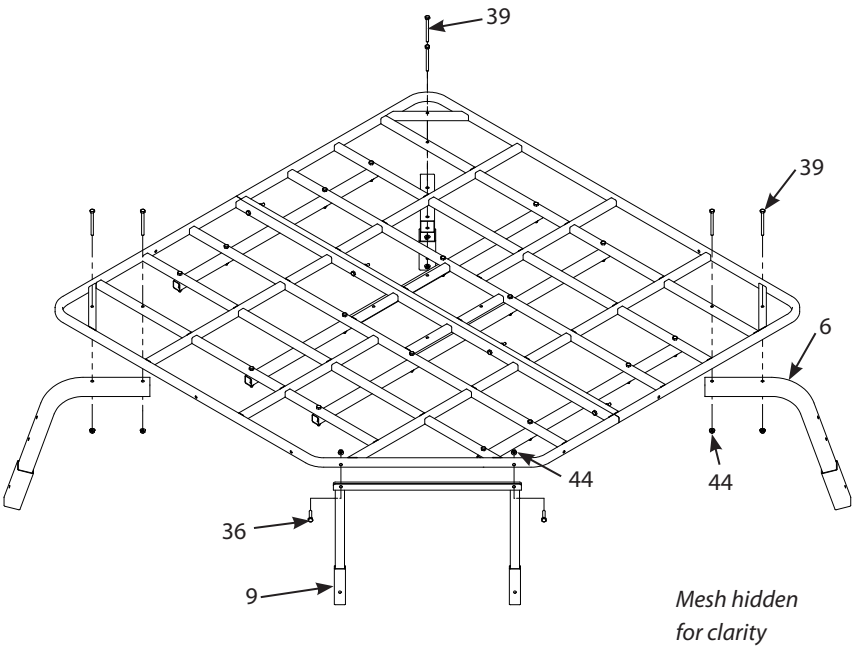

FIGURE 4

STEP 5

5. Attach the seat post bottom (19) to the assembled platform using four 1/4-20 X 1-3/4 IN bolts (37), eight 1/4 IN steel washers (43), and four 1/4-20 nuts (44). **SEE FIGURE 5.** ***Securely tighten all loose hardware at this time.***

   NOTE: Make sure that seat post plug (46) came inserted into seat post bottom (19).

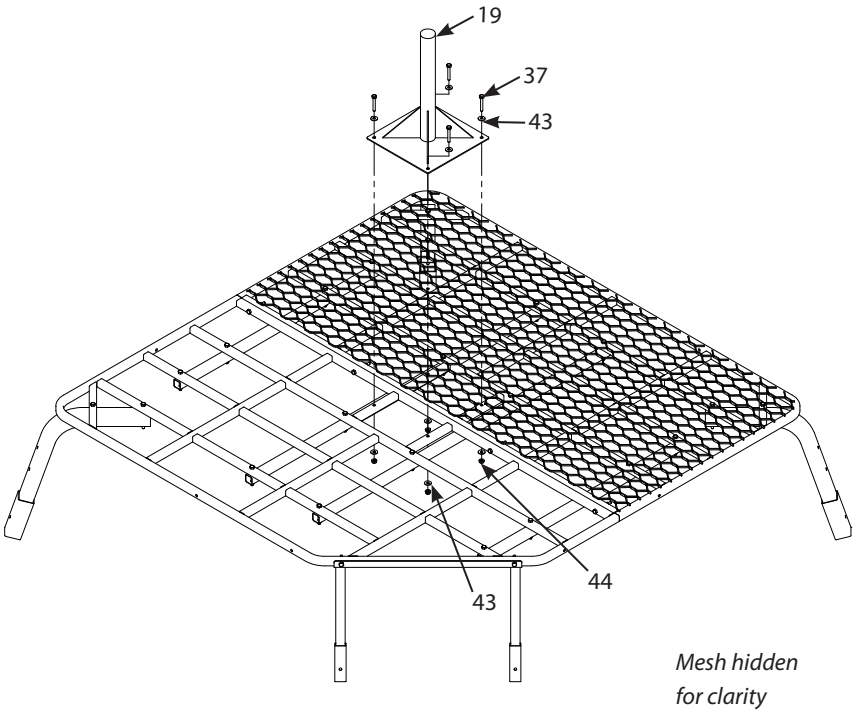

FIGURE 5

STEP 6

6. Attach the three vertical corner supports (23) to the leg-to-platform attachment parts (6) using two 1/4-20 X 3 IN bolts (39) and 1/4-20 nuts (44) for each support. **SEE FIGURE 6.**

   Attach the two vertical entry supports (22) to the front platform (2) using one 1/4-20 X 2-1/4 IN bolt (38) and 1/4-20 nut (44) for each support. **SEE FIGURE 6.**

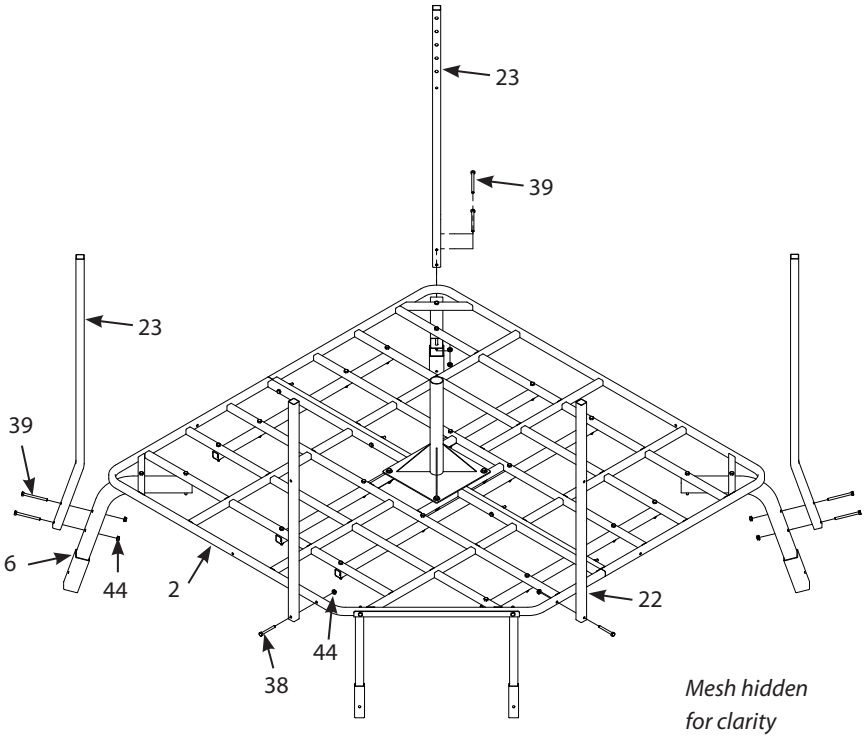

FIGURE 6

STEP 7

7. Attach the two long support braces (16) and two short support braces (17) to the vertical corner supports (23) and vertical entry supports (22) using five 1/4-20 X 1-1/2 IN bolts (36) and 1/4-20 nuts (44). **SEE FIGURE 7.**

   Attach one end of the four angled support braces (15) to each of the long support braces (16) and short support braces (17) using one 1/4-20 X 1-1/4 IN bolt (41) and 1/4-20 nut (44). **SEE FIGURE 7.**

   Attach the lower end of each angled support brace (15) to the assembled platform using one 1/4-20 X 1-1/2 bolt (36) and 1/4-20 nut (44). **SEE FIGURE 7.** ***Securely tighten all loose hardware at this time.***

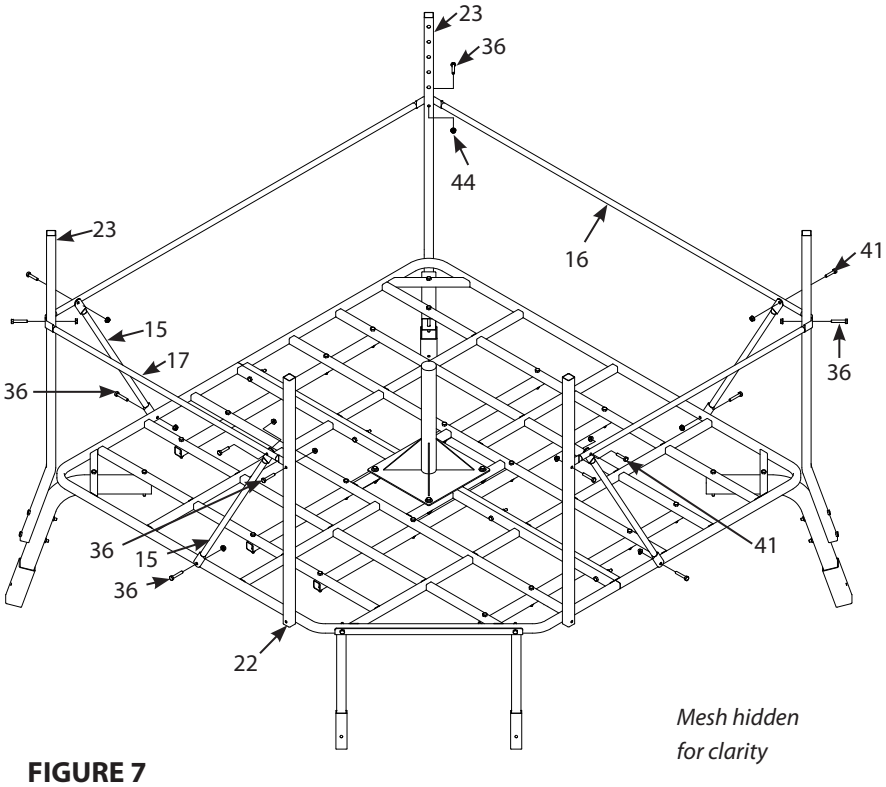

FIGURE 7

STEP 8

8. Assemble the shooting rail with the two long shooting rail parts (13), two short shooting rail parts (14), one shooting rail entry part (30), three shooting rail corner hubs (26), and two shooting rail entry hubs (25) using ten 1/4-20 X 1-1/4 IN bolts (41) and 1/4-20 nuts (44). **SEE FIGURE 8.** ***Securely tighten all loose hardware at this time.***

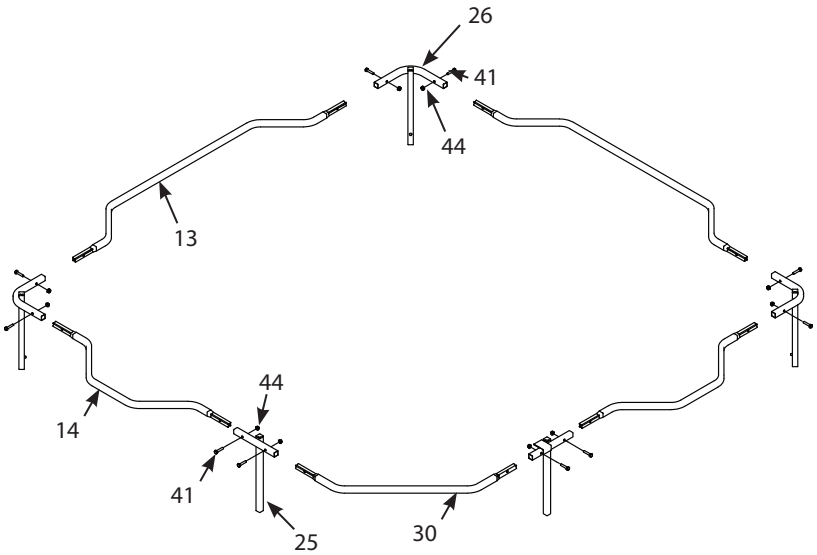

FIGURE 8

STEP 9

9. Attach the assembled shooting rail to the assembled top of the quad pod by inserting the five hubs into the five vertical supports. Secure with the push button pins at the highest height position at this time. **SEE FIGURE 9.** Later, once the quad pod is completely set up, use the push button pins to adjust the height of the shooting rail. Work your way around and move each hub one adjustment hole at a time until you reach the desired height.

   Attach the shooting rail pads (32, 33, 34) to the assembled shooting rail by wrapping around the rail and securing with the hook and loop strips. **SEE FIGURE 9.**

   NOTE: If you have purchased the Game Winner Quad-Pod 2.0 Accessory Kit, we recommend that you now assemble and attach it to the assembled Quad-Pod at ground level before attaching the legs. Refer to the instruction manual included with the accessory kit for assembly.

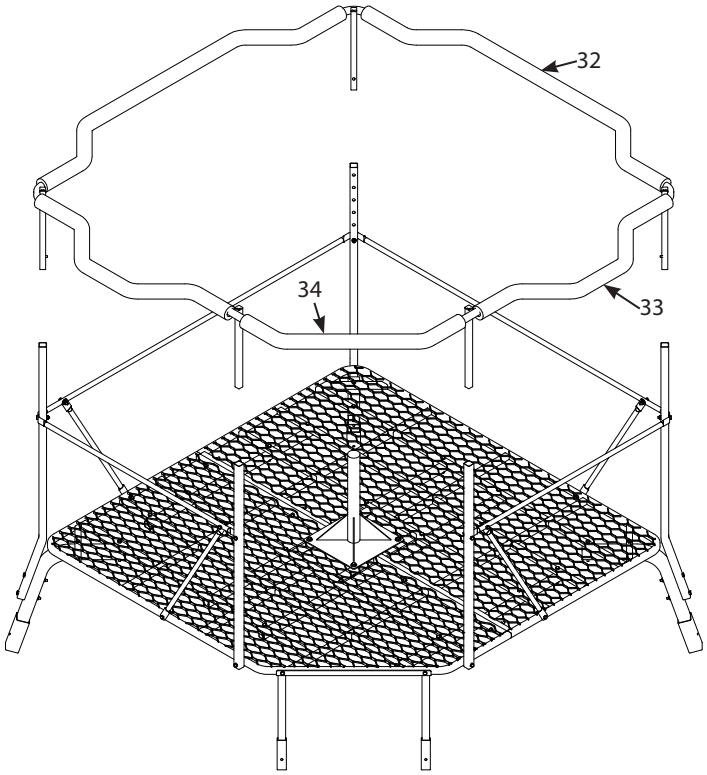

FIGURE 9

STEP 10

10. With the help of two people, tip assembled platform onto the side shown in Figure 10 by lifting on the opposite side and inserting two top legs (7) into leg-to-platform attachment parts (6). Attach a brace-to-leg attachment bracket (49) to each leg and secure together using a 1/4-20 X 2-1/4 IN bolt (38) and 1/4-20 nut (44) for each leg. Bolts must go through all parts (49, 6, 7). **SEE FIGURE 10.**

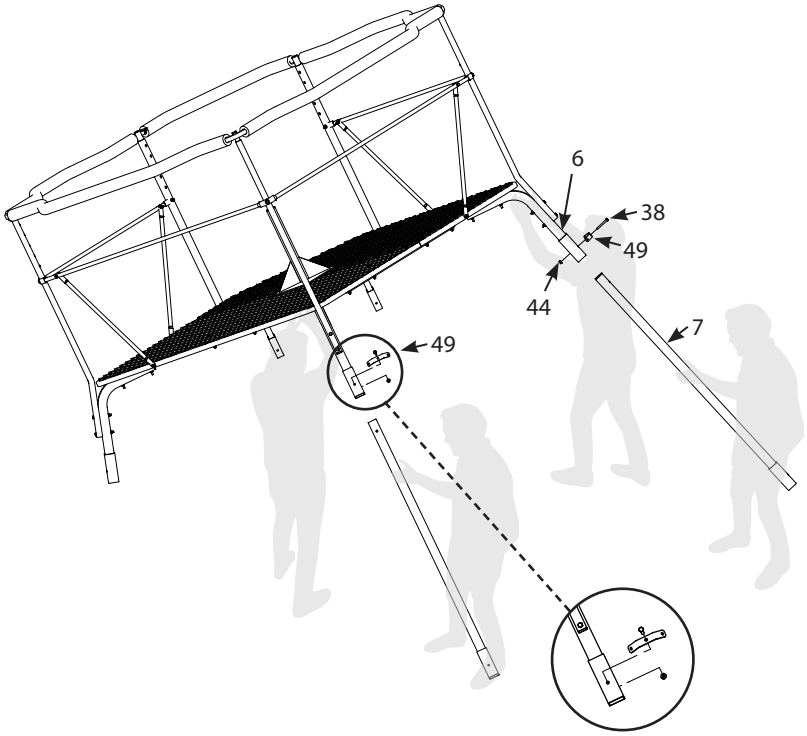

FIGURE 10

STEP 11

11. With the help of two people, lift platform up and insert one top leg (7) into leg-to-platform attachment part (6). Attach a brace-to-leg attachment bracket (49) to leg and secure together using a 1/4-20 X 2-1/4 IN bolt (38) and 1/4-20 nut (44). Bolt must go through all parts (49, 6, 7). **SEE FIGURE 11.**

    Then, insert the top ladder section (27) into the ladder-to-platform attachment part (9). Attach a brace-to-ladder attachment bracket (50) to each side of the ladder and secure with a 1/4-20 X 1-3/4 IN bolt (37) and 1/4-20 nut (44) on each side. Bolts must go through all parts (50, 9, 27). **SEE FIGURE 11.** ***Securely tighten all loose hardware at this time.***

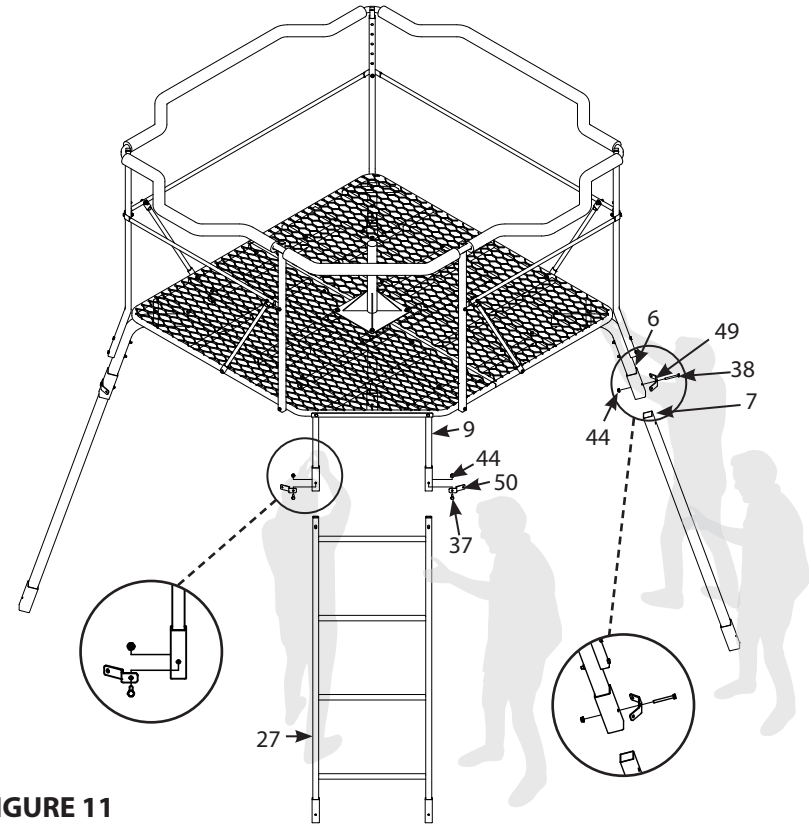

FIGURE 11

STEP 12

12. With the help of two people, slowly tip the partially erected quad pod onto two legs as shown in Figure 12 by lifting on the opposite leg and ladder. Once the two people have the quad pod balanced securely, the third person must insert one bottom leg (8) into top leg (7). Make sure foot pad is pointing outward. Secure the top and bottom leg parts together using a 1/4-20 X 2-1/4 IN bolt (38) and 1/4-20 nut (44). **SEE FIGURE 12.**

    Then, insert the bottom ladder section (28) into the top ladder section (27) and secure together using two 1/4-20 X 1-3/4 IN bolts (37) and 1/4-20 nuts (44). Make sure the foot pads are pointing outward. **SEE FIGURE 12.**

    Attach a brace-to-leg attachment bracket (49) to bottom leg (8) using a 1/4-20 X 2-1/4 IN bolt (38) and 1/4-20 nut (44). **SEE FIGURE 12.**

    Attach two brace-to-ladder attachment brackets (50) to the bottom ladder section (28) and secure with a 1/4-20 X 1-3/4 IN bolt (37) and 1/4-20 nut (44) on each side. **SEE FIGURE 12.**

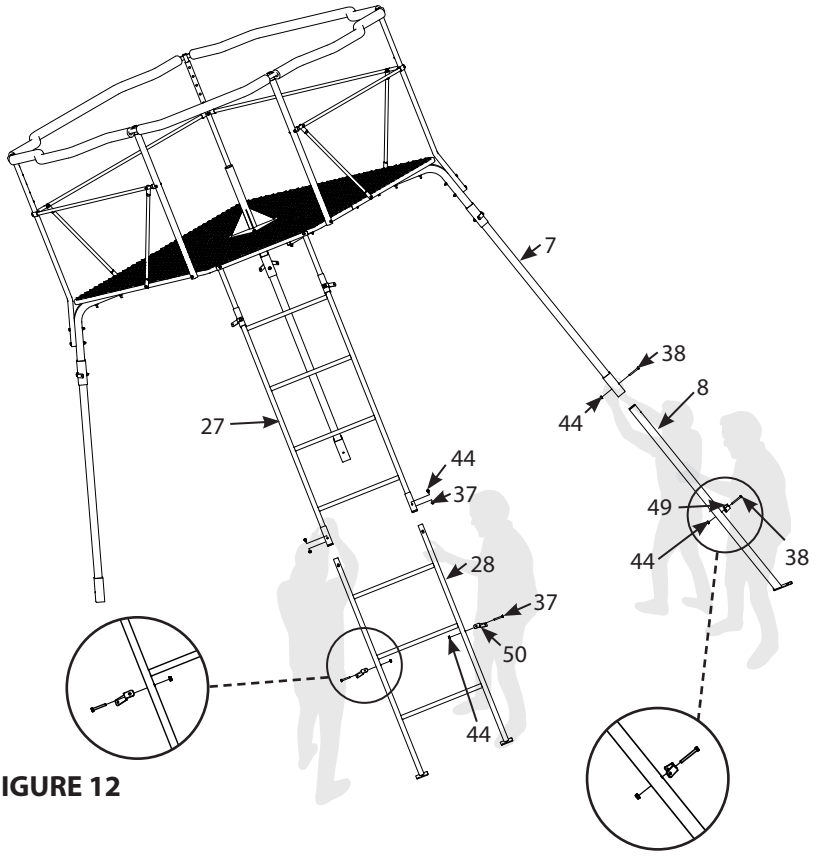

FIGURE 12

STEP 13

13. With the help of two people, slowly tip the partially erected quad pod onto the ladder and one leg as shown in Figure 13 by lifting on the opposite two legs. Once the two people have the quad pod balanced securely, the third person must insert one bottom leg (8) into each top leg (7). Make sure foot pads are pointing outward. Secure the top and bottom leg parts together using a 1/4-20 X 2-1/4 IN bolt (38) and 1/4-20 nut (44) for each leg. **SEE FIGURE 13.**

    Attach a brace-to-leg attachment bracket (49) to each bottom leg (8) using a 1/4-20 X 2-1/4 IN bolt (38) and 1/4-20 nut (44) for each leg. **SEE FIGURE 13.** ***Securely tighten all loose hardware at this time.***

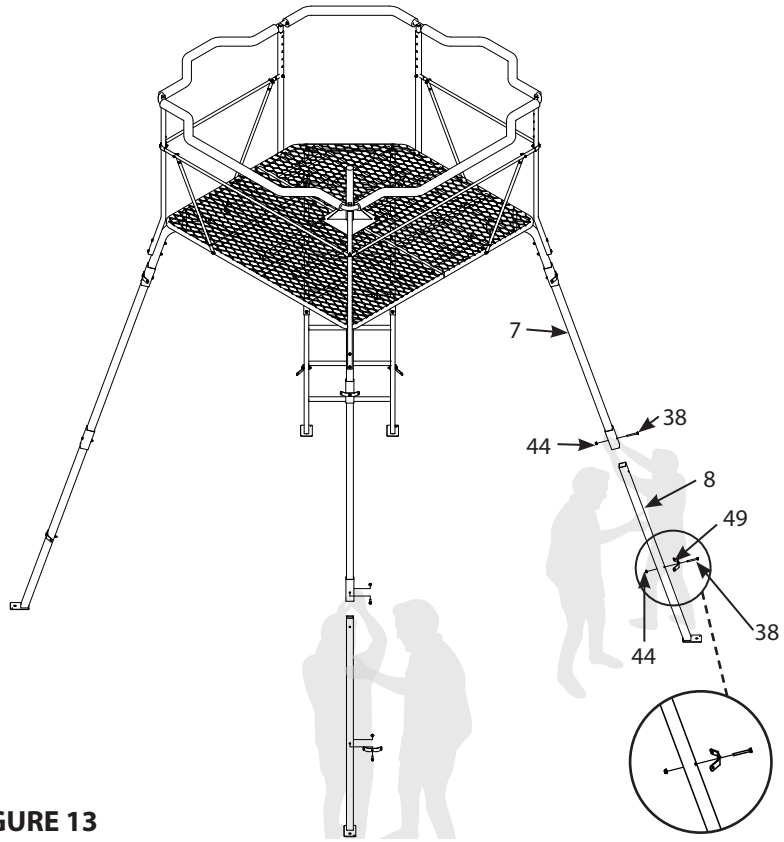

FIGURE 13

STEP 14

14. Off to the side, assemble the cross braces by inserting a male cross brace (1) into each female cross brace (10, 11, 12). Secure each assembly together using a 1/4-20 X 1 IN bolt (40) and 1/4-20 nut (44). You should have a total of eight cross braces assembled, four long (1, 10), two medium (1, 11), and two short (1, 12). **SEE FIGURE 14.** ***Securely tighten all loose hardware at this time.***

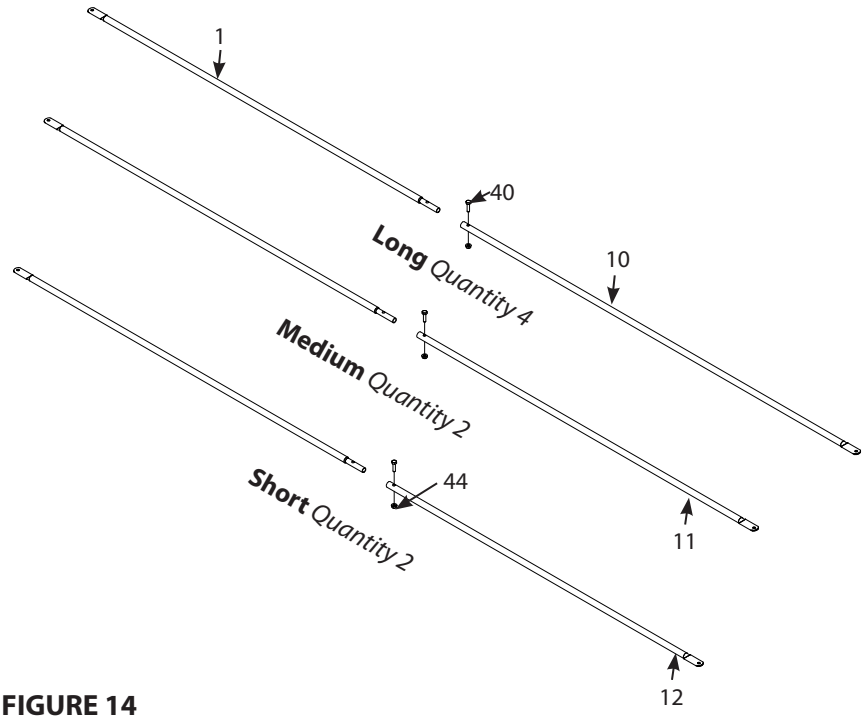

FIGURE 14

STEP 15

15. Attach the four long cross brace assemblies (1, 10) to the brace attachment brackets (49) on the two sides opposite of the ladder using a 1/4-20 X 3/4 IN bolt (42) and 1/4-20 nut (44) on each end. **SEE FIGURE 15.**

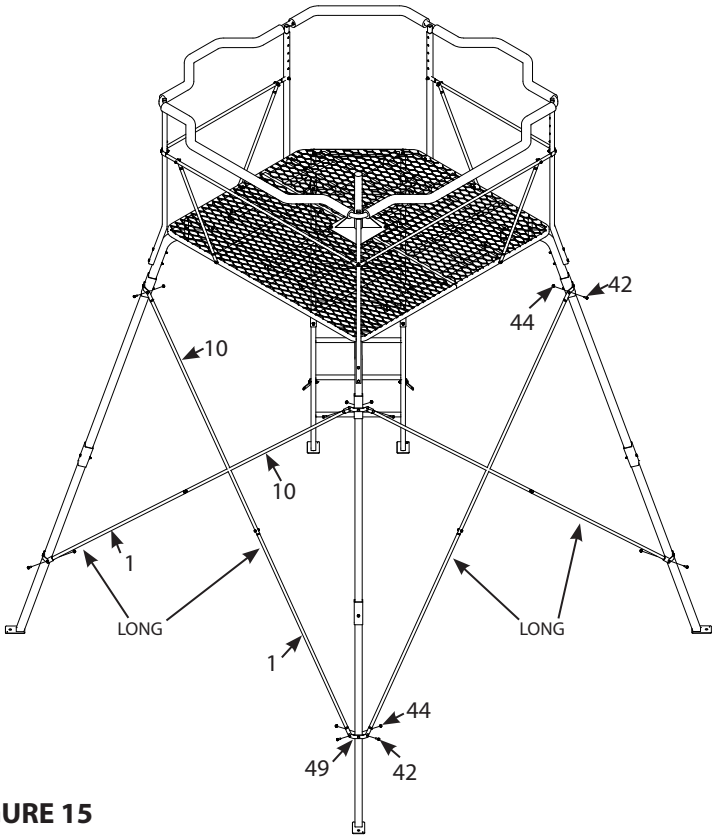

FIGURE 15

STEP 16

16. Attach the two medium cross brace assemblies (1, 11) and two short cross brace assemblies (1, 12) to the brace attachment brackets (49, 50) on the remaining sides of the quad pod using a 1/4-20 X 3/4 IN bolt (42) and 1/4-20 nut (44) on each end. **SEE FIGURE 16.** ***Securely tighten all loose hardware at this time.***

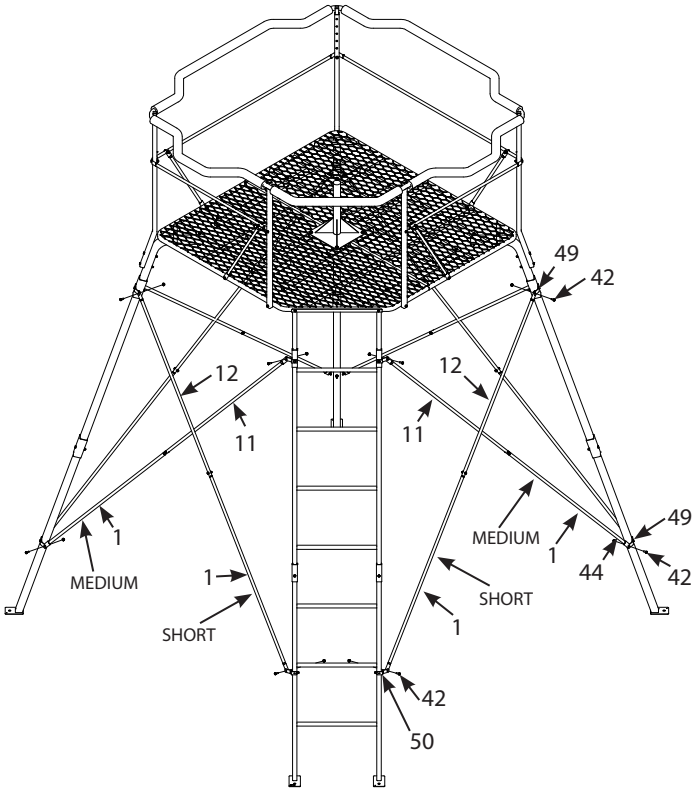

FIGURE 16

STEP 17

17. Begin assembly of the seat by laying the seat assemblies (21) face down. Then, lay the seat frame (20) over top of the seats (21). Attach the seats to the frame using eight 1/4-20 X 1-3/4 IN bolts (37), 1/4 IN steel washers (43), and 1/4-20 nuts (44) for each seat. Only hand tighten all hardware to start. Then, once all hardware is started by hand, securely tighten to tension the seats. **SEE FIGURE 17.**

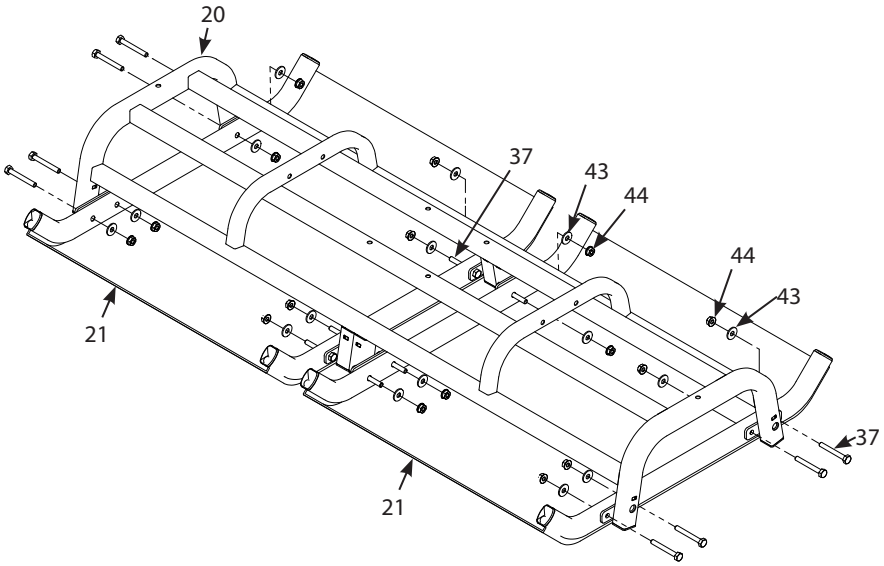

FIGURE 17

STEP 18

18. Attach the top seat post (18) to the seat frame (20) using four 1/4-20 X 1-1/2 IN bolts (36), 1/4 IN steel washers (43), and 1/4-20 nuts (44). **SEE FIGURE 18.**

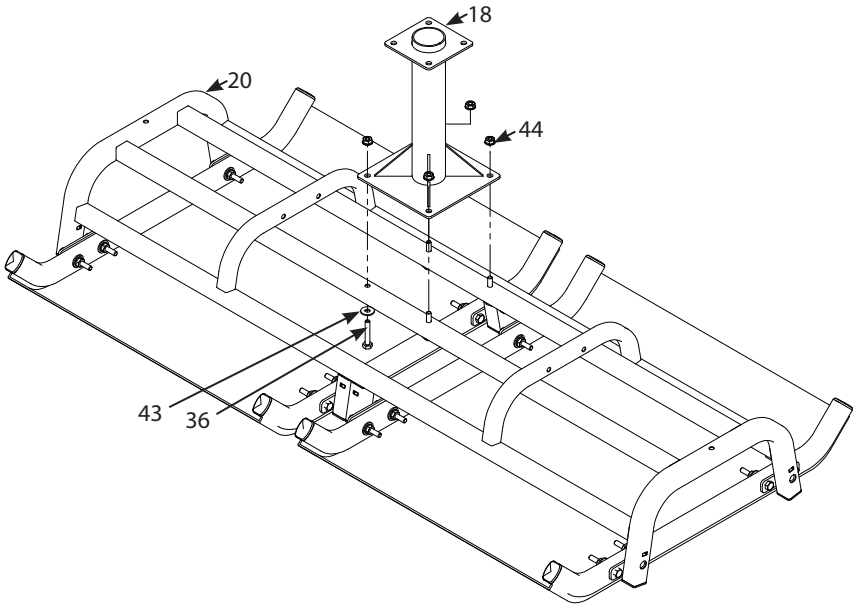

FIGURE 18

STEP 19

19. Attach the two angled seat braces (29) to the top seat post (18) and seat frame (20) using two 1/4-20 X 2 IN bolts (35), two 1/4-20 X 1-1/2 IN bolts (36), and four 1/4-20 nuts (44) for each brace. **SEE FIGURE 19.** ***Securely tighten all loose hardware at this time.***

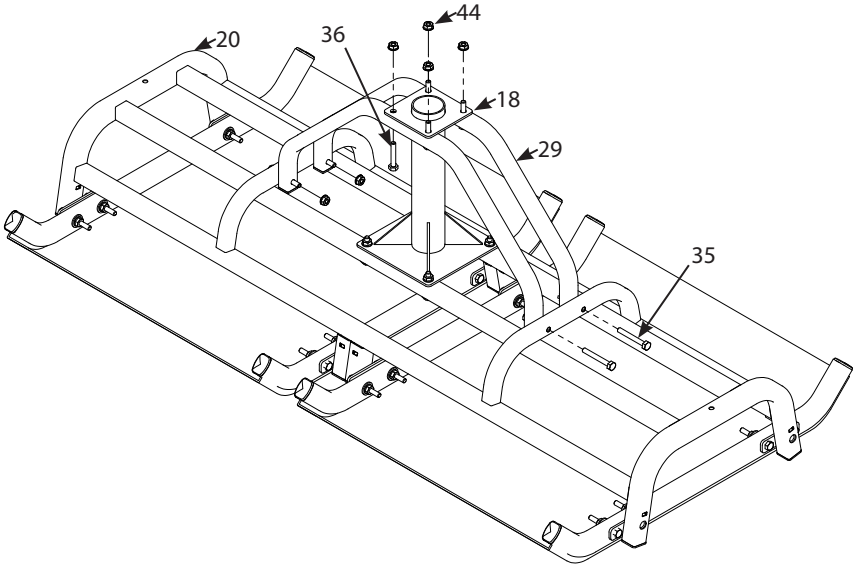

FIGURE 19

STEP 20

20. Using a haul line, pull the assembled seat up into the quad pod. **SEE FIGURE 20.** Slide the seat onto the bottom seat post (19). **SEE FIGURE 20A.**

FIGURE 20A

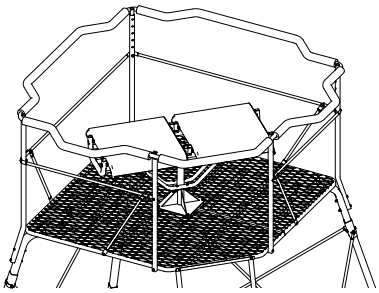

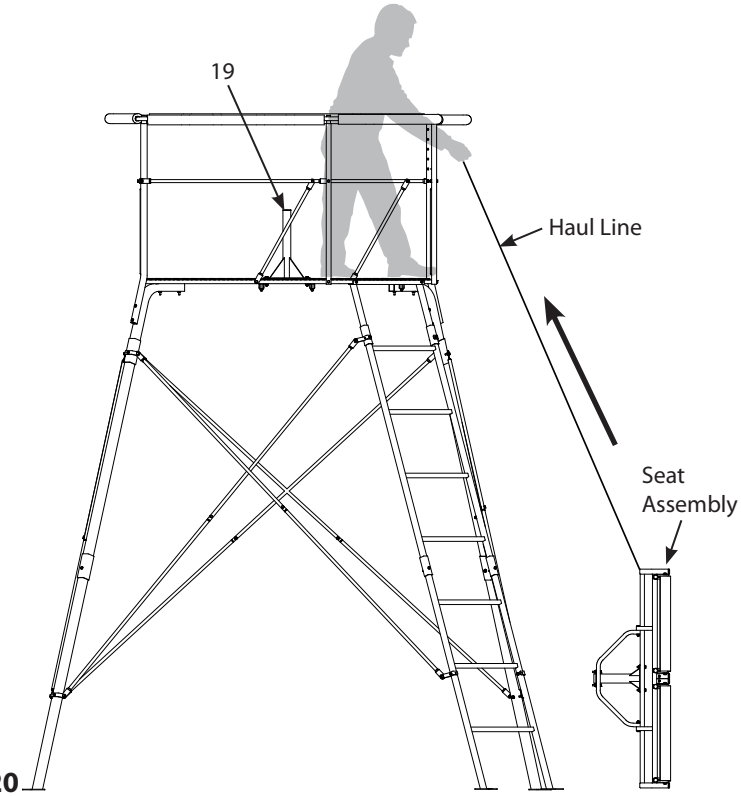

FIGURE 20

STEP 21

21. Using a haul line, pull the two backrests (24) up into the quad pod. **SEE FIGURE 21.** Decide how you want the backrests oriented, both on the same side or alternated one on each side. Attach the backrests to the seat by sliding into the pockets and securing with one push button pin. **SEE FIGURE 21A AND FIGURE 21B.**

FIGURE 21B

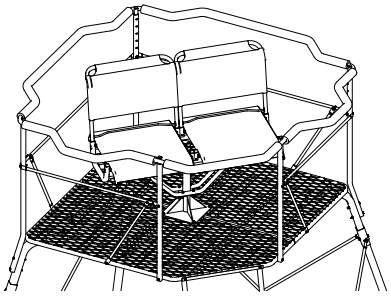

FIGURE 21

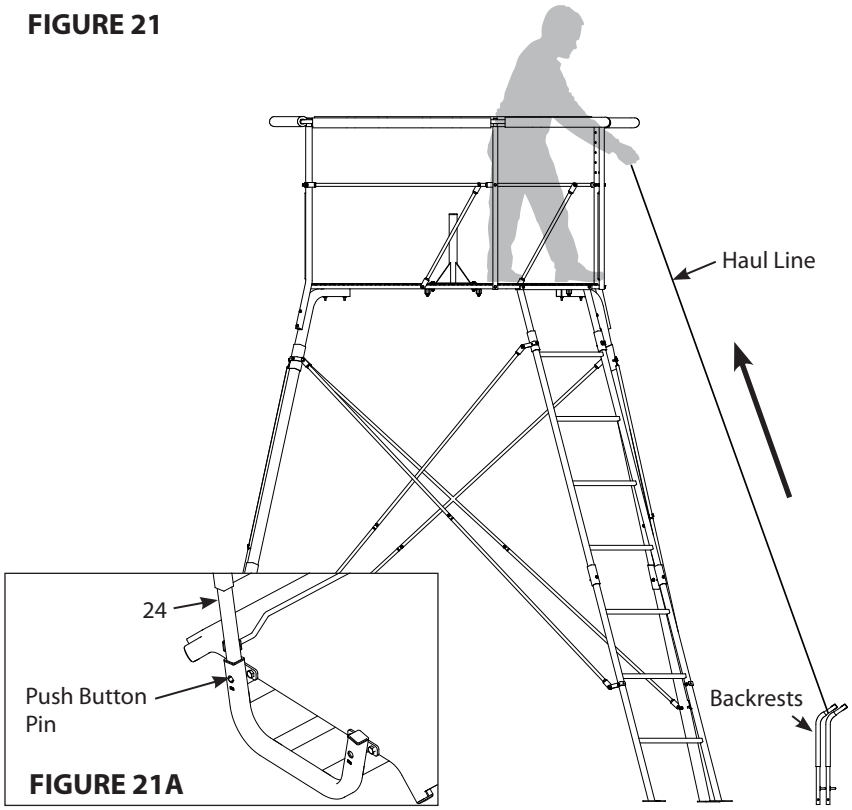

FIGURE 21A

STEP 22

22. Using a hammer, drive the five provided ground stakes (31) into the ground at an angle towards the center of the quad pod. Driving them in at a similar angle as shown in Figure 22 will greatly increase how well the quad pod is secured to the ground. **SEE FIGURE 22.**

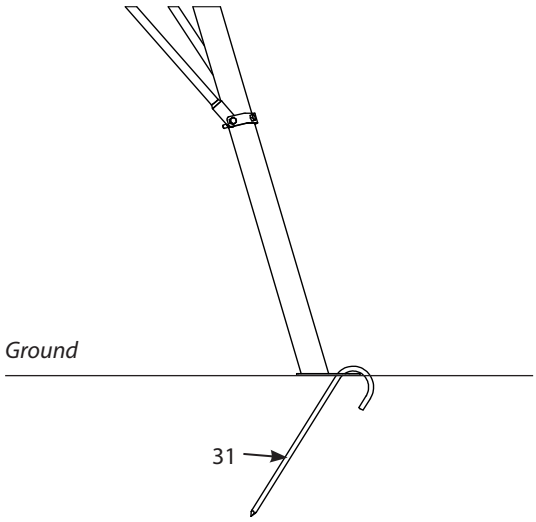

FIGURE 22

INSPECTION AND MAINTENANCE

BEFORE EACH USE PERFORM THE FOLLOWING:

- Inspect all webbing, rope, cord, and strap assemblies for wear or damage.
- Inspect cables and/or cable ends for damage or kinking.
- Inspect all hardware and chain components for damage.
- Inspect for any structural damage to product. (If any exists call customer service.)
- Inspect all nut and bolt assemblies to be certain none are loose.
- Inspect for any missing parts.
- Lubricate all pivot and slide together points with powder graphite, petroleum jelly or silicone spray to prevent noise, wear and rust.
- Inspect entire product for any rust, corrosion, cracks, freezing, excessive heat or rotting damage that may effect the safety of your product. Discard any questionable product.
- Inspect entire product for any structural damage - pay close attention to all weld locations. (Return to factory for repair or discard product if any damage is found.)
- Using correct wrenches inspect all nut & bolt assembly locations and snug up any that may be loose. Be careful not to crush tubing when tightening!
- Inspect and check operation of all cables, cable ends, cord, rope, webbing, and strap or chain assemblies. Replace with factory new any item or assembly that shows signs of wear, damage, kinking, or functions incorrectly.
- Inspect seat. Replace any seat with factory new that shows signs of structural damage or wear.
- Inspect all hardware for wear or damage, also be sure you have no missing parts.
- Never modify your stand in any way by making repairs, replacing parts, or altering adding or attaching anything to it except if explicitly authorized in writing by the manufacturer.

NOTES

NOTES

NOTES

GAME WINNER™

*All weights, specifications and features are approximate and are subject to change without notice. Due to continuous product improvements, product images may not be exact. Warning labels in some product images may have been removed for photography purposes only. Props shown in photos not included. Some assembly may be required.