PRODUCT MEETS INDUSTRY STANDARDS RECOGNIZED BY

TMA®

PARTICIPATING MEMBER

GAME WINNER™

Instruction Manual

10' BLIND TOWER

MODEL #: PL402GW
STYLE #: 165841

Maximum Height

12' 1" to rail
10' 0" to platform

Maximum Field Rating

800 lbs
(300 lbs per person max)

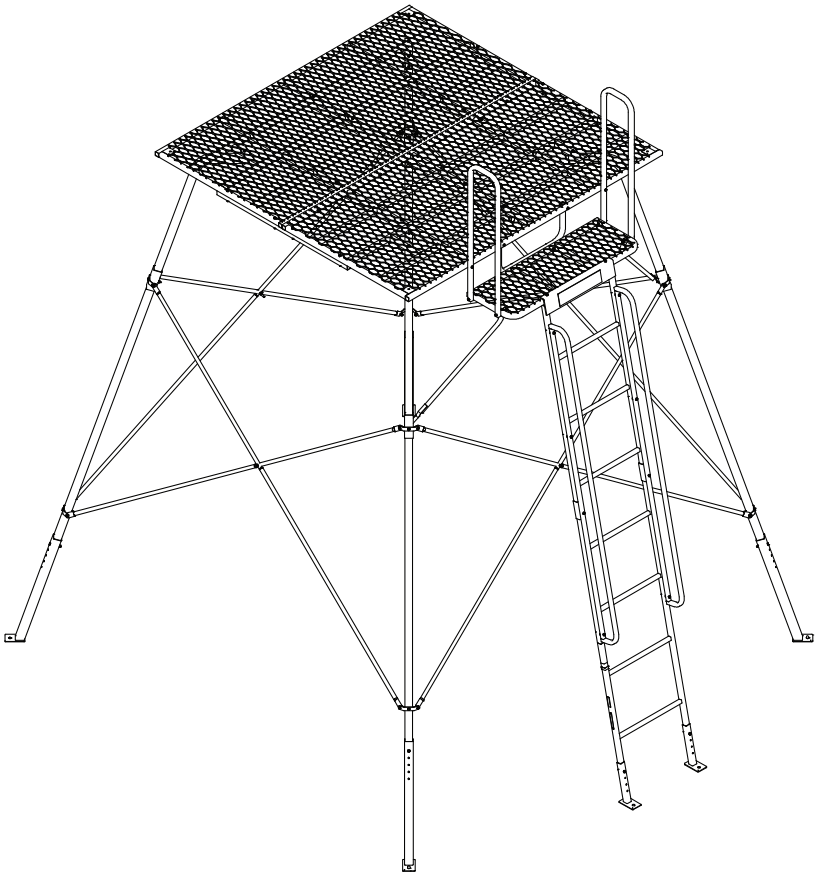

ATTENTION

YOU MUST READ ALL WRITTEN INSTRUCTIONS AND WATCH THIS SAFETY VIDEO BEFORE USING!

WARNING! FALL HAZARD! FALLS FROM HEIGHTS MAY RESULT IN SERIOUS INJURY OR DEATH!

WATCH THIS SAFETY VIDEO BEFORE USING!

Scan

or Visit www.standsafety.com/r5

Scan the QR code with your smart phone, tablet or similar device.

OR

Type the website address into your web browser to view an important safety video before using this product.

TRIPOD STAND SAFETY

For parts call our Customer Service Center at 800-345-6007

Business Hours: 8:00 am to 4:30 pm CST | info@huntriversedge.com

© 2021 Ardisam All Rights Reserved | 39032 REV1: 05/04/2021

TABLE OF CONTENTS PAGE

Warranty Information 2
Warnings 3-4
Parts List 5-7
Hardware/Small Parts List 7-8
Tools Required 9
Product Diagrams 10-12
Finished Tower 13
Assembly Instructions 14-22
Inspections and Maintenance 23

Note: Before beginning assembly of product, make sure all parts are present. Compare parts list with package and hardware contents. If any part is missing or damaged do not attempt to assemble the unit. Contact customer service for replacement parts.

WARRANTY

Ardisam offers a **one year warranty** for all components of the treestand. These warranties apply to the original owner with a proof of purchase. These warranties begin on the date of purchase by the first retail consumer and continue for the period specified above. These warranties apply to products that are not modified, abused or used in a manner that deviates from the product's intended usage. Minor fading in color is normal and is not covered by warranty. Any corrosion of painted surfaces that occurs as a result of paint being removed or damaged is also not covered by warranty. Ardisam offers no other warranty expressed or implied. Products for which warranty work has been approved must be sent directly to Ardisam and performed by Ardisam. **To obtain warranty service and/or replacement instructions, you must obtain prior approval from Ardisam before shipping your package to us by calling our customer service department at 800-345-6007 or by writing to: Ardisam, Inc., P.O. Box 755, 1160 Eighth Avenue, Cumberland, WI 54829 for a return material authorization number (RMA#).** All items must be shipped prepaid. Ardisam will, at no charge, repair or replace, in Ardisam's sole discretion, any product that satisfies the conditions stated above. Ardisam retains the right to change models, specifications and price without notice.

This equipment has been manufactured under strict quality and safety guidelines. As with any equipment of this type, full understanding of the instructions and its use is mandatory and imperative for the safety of its user. Ardisam is not responsible for any damages or injuries sustained due to improper use or modification of any of its products, or resulting from any use which deviates from the product's intended usage. Ardisam is not responsible for any injuries sustained due to failure to read and adhere to the instructions for use. Any misunderstanding or questions regarding the products of their use should be directed to Ardisam prior to any use. It is the owner's sole responsibility to inspect the product regularly for damage, improper installation, or conditions that could jeopardize the ultimate safety of the product. **Owner is responsible to understand and follow product field weight rating and must never exceed maximum weight rating.** Ardisam is not responsible for any malfunction or injury resulting from normal wear and tear, damage caused by improper use, improper maintenance, negligence or accidents. This product, if used safely as intended, will provide trouble free service for the useful life of the product. We hope you will enjoy the quality of our products for years to come, and have a safe hunt.

If you choose to attach a blind type structure on this product, only use Ardisam original designed structures to do so. *Using man-made structures or structures not manufactured by Ardisam will void your warranty and waive any and all claims for liability against the manufacturer Ardisam.

STOP READ AND UNDERSTAND THE FOLLOWING WARNINGS BEFORE ASSEMBLY

MODEL PL402GW, STYLE 165841

MAXIMUM USE HEIGHT - 12' 1" TO RAIL

TOTAL WEIGHT LIMIT - 800 LB (300 LB PER PERSON MAX)

⚠ WARNING

This product carries strict height and weight restrictions.

⚠ **Do Not** use this product if you exceed the total weight limit. Please note that the total weight limit includes the user(s) and their equipment.

⚠ WARNING

⚠ **When hunting from a treestand or free standing platform stand falls can occur any time after leaving the ground causing injury or death.**

⚠ **Read and understand** all of the manufacturer's Warnings and Instructions and use all safety devices provided by the manufacturer. Contact the manufacturer for any questions. Failure to do so could result in injury or death.

⚠ **Never** exceed the total weight limit of the treestand or free standing platform stand.

⚠ **Never** use a treestand or free standing platform stand during inclement weather such as rain, lightning, windstorms or icy conditions and end your hunt and return to the ground if inclement conditions arise.

⚠ **Never** use a treestand or free standing platform stand while using drugs (even prescription drugs) or alcohol.

⚠ **Never** use a treestand or free standing platform stand while feeling ill, nauseous or dizzy, or if you have a prior medical condition that could cause a problem, that is, heart condition, joints that lock-up, spinal fusions, etc., or if you are not well rested. **Never** sleep in stand.

⚠ **Always** avoid electrical power lines.

⚠ **Never** rely on a tree branch for support.

⚠ **Never** jump or bounce on a treestand or free standing platform stand to seat it to the tree or ground.

⚠ Pull up a bow, backpack, or firearm or other equipment only after being secure in the treestand or free standing platform stand and a firearm must be pulled up with it unloaded, chamber open, and muzzle down.

⚠ **Always** inform someone of the hunting location, where the treestand or free standing platform stand will be located and the expected duration of the hunt.

⚠ WARNING

⚠ A signal device such as a mobile phone, radio, whistle, signal flare or personal locator device (PLD) must be on your person and readily available at all times.

⚠ Inspect the treestand or free standing platform stand and all safety devices each time before use and **Do Not** store a treestand or free standing platform stand outdoors when not in use.

⚠ **Never** modify your treestand or free standing platform stand in any way by making repairs, replacing parts, or altering it except if explicitly authorized in writing by the manufacturer.

⚠ Practice installing, adjusting and using your treestand or free standing platform stand at ground level prior to using it at elevated positions. Study your new stand to become familiar with all of its features and design. Doing so will confirm that the product is manufactured, assembled and installed correctly.

⚠ Instructions (written and video) shall be kept in a safe place and reviewed at least annually. It is the responsibility of the treestand or free standing platform stand owner to furnish the complete instructions to any person who borrows or purchases the treestand or free standing platform stand.

⚠ **Always** use at least four (4) people to install or take down a free standing platform stand.

⚠ Stabilization devices must be attached before climbing to the platform.

⚠ When installing a ladder stand or free standing platform stand, always bounce on the first rung to set the ladder into the ground according to manufacturer's instructions before proceeding to climb any higher.

⚠ Check every ladder/leg section connection every time you use the stand before you leave the ground. If ladder/leg sections are separating, do not use the stand.

⚠ Check the ground under the stand to make sure it is firm and level. Sloping ground or uneven surface (one side on a rock) can cause your ladder or free standing platform stand to tilt or shift off as you climb.

⚠ **Always** maintain three (3) points of contact when climbing a ladder treestand or free standing platform stand. Proper three-point contact means having either two feet with one hand or one foot with two hands on the step portion of the ladder or climbing aid at all times.

⚠ **Always** lean forward as you climb ladder or climbing aid.

⚠ **Never** exceed the stated maximum use height.

STOP READ AND UNDERSTAND THE FOLLOWING WARNINGS BEFORE SETUP AND USE

⚠ WARNING

- ⚠ **Do Not** use this product until you have watched the safety video, understand it, and practiced the techniques for safe hunting discussed in this video. The video can be found with the QR code and/or URL shown on front cover of this manual.
- ⚠ Read and perform all inspection and maintenance tasks before each and every use. Replace any questionable components immediately with RETI original replacement parts.
- ⚠ **Do Not** crush tubing when tightening bolt assemblies! Identify and familiarize yourself with all parts before you start. Bolt identification chart can be found in the back.
- ⚠ Double check assembly steps to be certain you have correctly assembled this product.
- ⚠ **Never** use any product that has not been maintained or inspected properly - Your life depends on it!
- ⚠ **Always** wear the appropriate footwear when using a free standing platform stand. A good non-slip safety boot is important to your personal safety. Be especially careful that boot laces do not get hooked on the stand or any of its components (tuck shoelaces into boots before climbing).
- ⚠ Do not position this product on a slope, unlevel, or wet ground. It may tip over and serious injury or death may occur.
- ⚠ Ground must be free of rocks and debris so stakes can be driven into ground through holes provided in foot pads. This will help prevent tower from tipping over in strong winds.
- ⚠ Contacting buried utilities may result in serious injury or death! Before digging always call 811 or you local One-Call system to prevent person injury, interruption of service, environmental accidents or project delays.
- ⚠ Heavy product, **Always** use at least four (4) people to install or take down a free standing platform stand. **Do Not** let someone with a history of back problems help.

⚠ WARNING

- ⚠ Be sure only one person ascends or descends ladder at a time. Be certain first person is fully off of the ladder and positioned safely on tower platform or ground before second person ascends or descends ladder.
- ⚠ **Never** have two people on one side of the platform. Keep weight evenly distributed on platform.
- ⚠ **Always** be aware of the other person's position. Use extreme caution when weapons are used to prevent personal injury.
- ⚠ **Always** lean forward as you climb ladder or climbing aid.
- ⚠ **Always** maintain three (3) points of contact when climbing a ladder treestand or free standing platform stand. Proper three-point contact means having either two feet with one hand or one foot with two hands on the step portion of the ladder or climbing aid at all times.
- ⚠ **Always** wear the appropriate footwear when using a free standing platform stand. A good non-slip safety boot is important to your personal safety. Be especially careful that boot laces do not get hooked on the stand or any of its components (tuck shoelaces into boots before climbing).

⚠ WARNING

- ⚠ Double check assembly steps to be certain you have correctly assembled this product.
- ⚠ Study your new stand to become familiar with all of its features and design. Save these instructions for future reference.
- ⚠ **Be Sure** assembly area is open, flat, level, and dry with no power lines near!
- ⚠ **Always** use at least four (4) people to install or take down a free standing platform.
- ⚠ **Do Not** use any type of motorized vehicle to upright/ assemble this free standing platform stand. You could cause unnecessary damage to this product. Upright by hand only using four people.
- ⚠ Some models include a shooting rail. **Never** lean against, lean over, or sit on shooting rail. It is designed as a shooting rest only. On models that have a non-fixed shooting rail, be sure shooting rail is flipped back or swung to the side when ascending or descending ladder.

PARTS LIST (NOT TO SCALE)

Item	Part No.	Description	Image	Qty
1	# 38967	PLATFORM	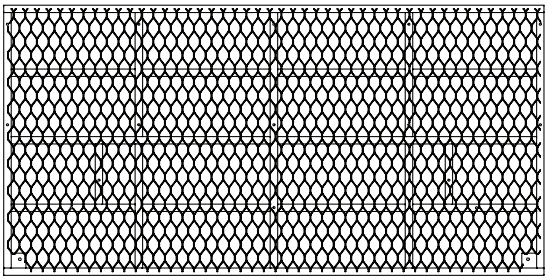	2
2	# 38968	SHORT PLATFORM BRACE	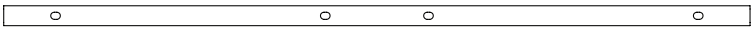	4
3	# 38970	LONG CENTER PLATFORM BRACE	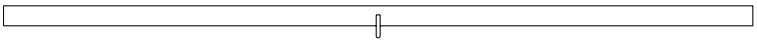	1
4	# 38971	ENTRY PLATFORM BRACE		1
5	# 38974	ENTRY PLATFORM	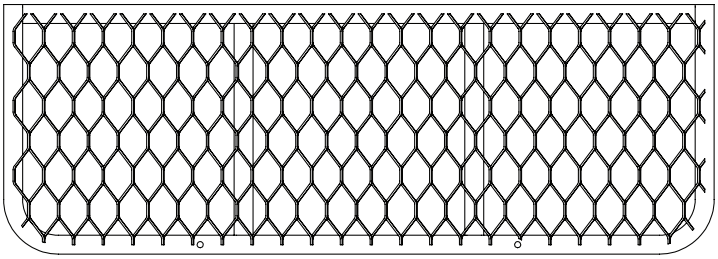	1
6	# 38975	ENTRY PLATFORM HAND RAIL	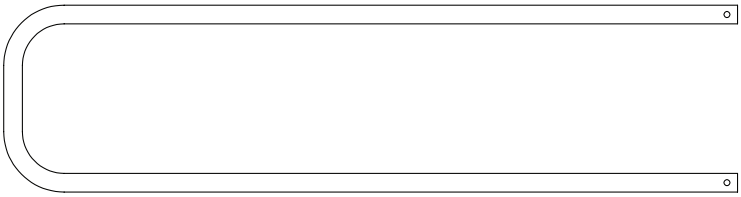	2

Item	Part No.	Description	Image	Qty
7	# 38977	BOTTOM LADDER SECTION	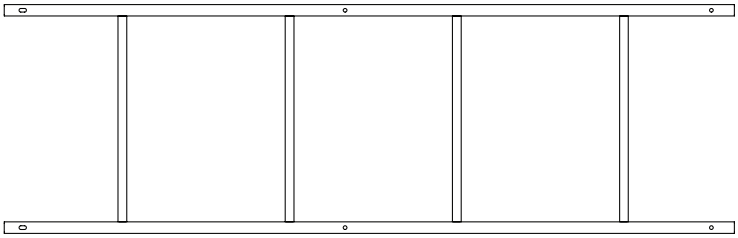	1
8	# 38982	TOP LADDER SECTION	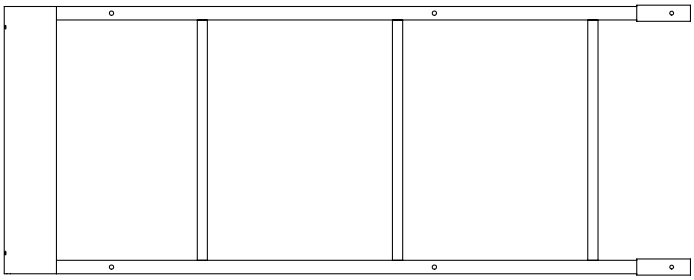	1
9	# 38984	ADJUSTABLE LADDER FOOT	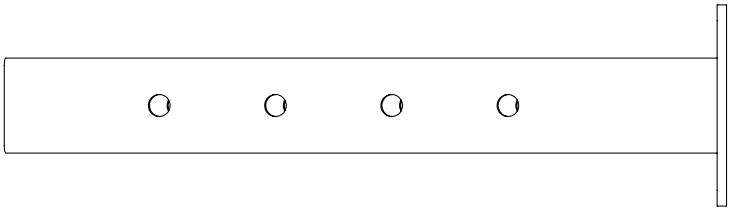	2
10	# 38986	LADDER HAND RAIL	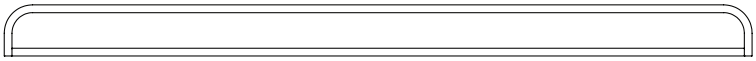	2
11	# 38987	LEG TO PLATFORM ATTACHMENT	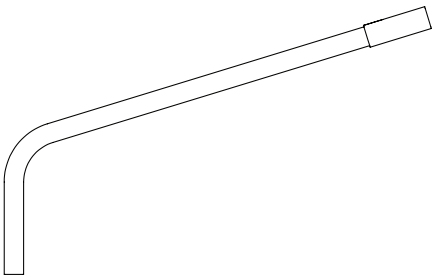	4
12	# 38988	LEG	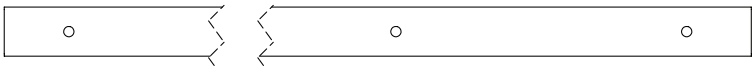	4
13	# 38990	ADJUSTABLE FOOT		4
14	# 38991	GROUND STAKE	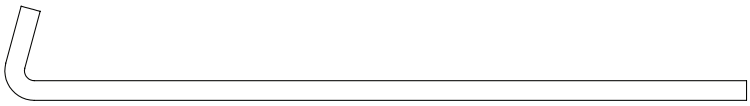	4

Item	Part No.	Description	Image	Qty
15	# 38992	GROUND AUGER STAKE		1
16	# 38997	RIGHT ENTRY PLATFORM BRACE		1
17	# 38998	LEFT ENTRY PLAT-FORM BRACE	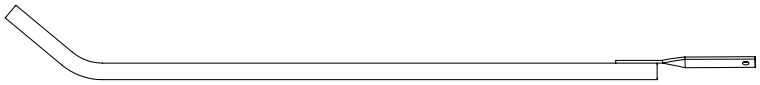	1
18	# 38999	MALE CROSS BRACE	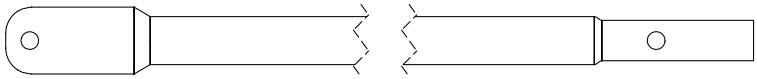	8
19	# 39001	FEMALE CROSS BRACE	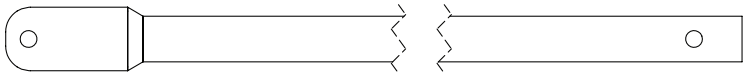	8

HARDWARE LIST

Item	Part No.	Description	Image	Qty
20	# 48153B	BOLT 1/4 X 2 IN		10
21	# 48250B	BOLT 1/4 X 1-3/4 IN	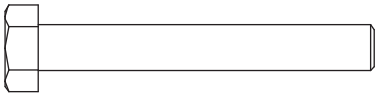	2
22	# 48270B	BOLT 1/4 X 2-1/2 IN	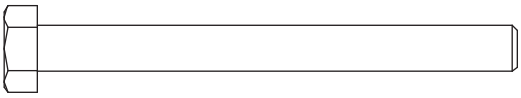	24
23	# 48271B	BOLT 1/4 X 2-1/4 IN	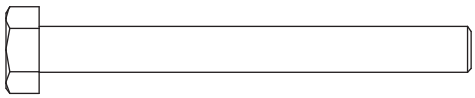	20
24	# 48280B	BOLT 1/4 X 3 IN	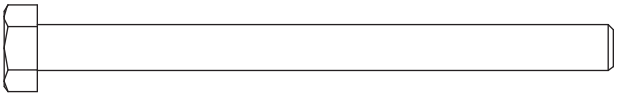	16
25	# 63282	BOLT 1/4 X 1 IN	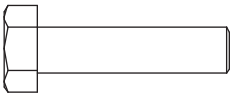	4

Item	Part No.	Description	Image	Qty
26	# 8930B	BOLT 1/4 X 3/4 IN	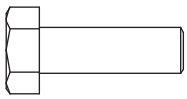	16
27	# 32205	ORANGE PLASTIC WASHER	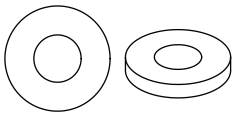	6
28	# 48261B	WASHER 1/4 IN	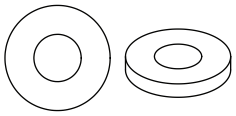	12
29	# 48752B	NUT 1/4 IN	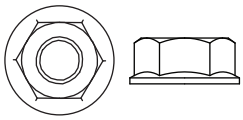	92
30	# 48650	1/8 IN CABLE CLAMP	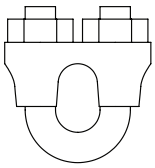	4
31	#24103	TIE DOWN CABLE	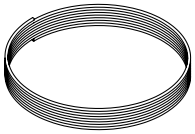	1
32	# 32169	BRACKET BRACE TO LEG ATTACHMENT	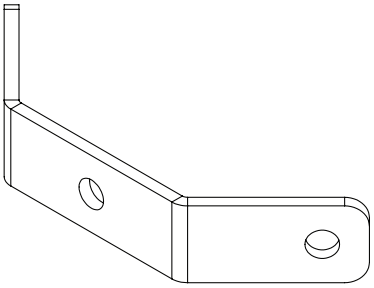	8

TOOLS REQUIRED

-	# 32563	7/16" WRENCHES	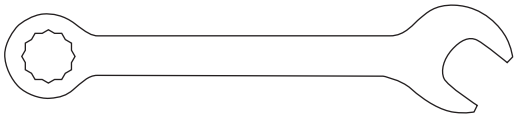	2
-	-	5/16" WRENCH	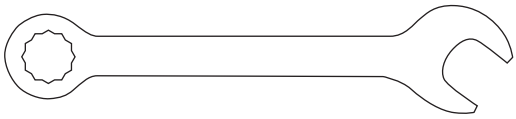	1
-	-	HAMMER	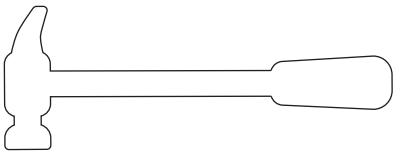	1

PRODUCT DIAGRAM - PLATFORM

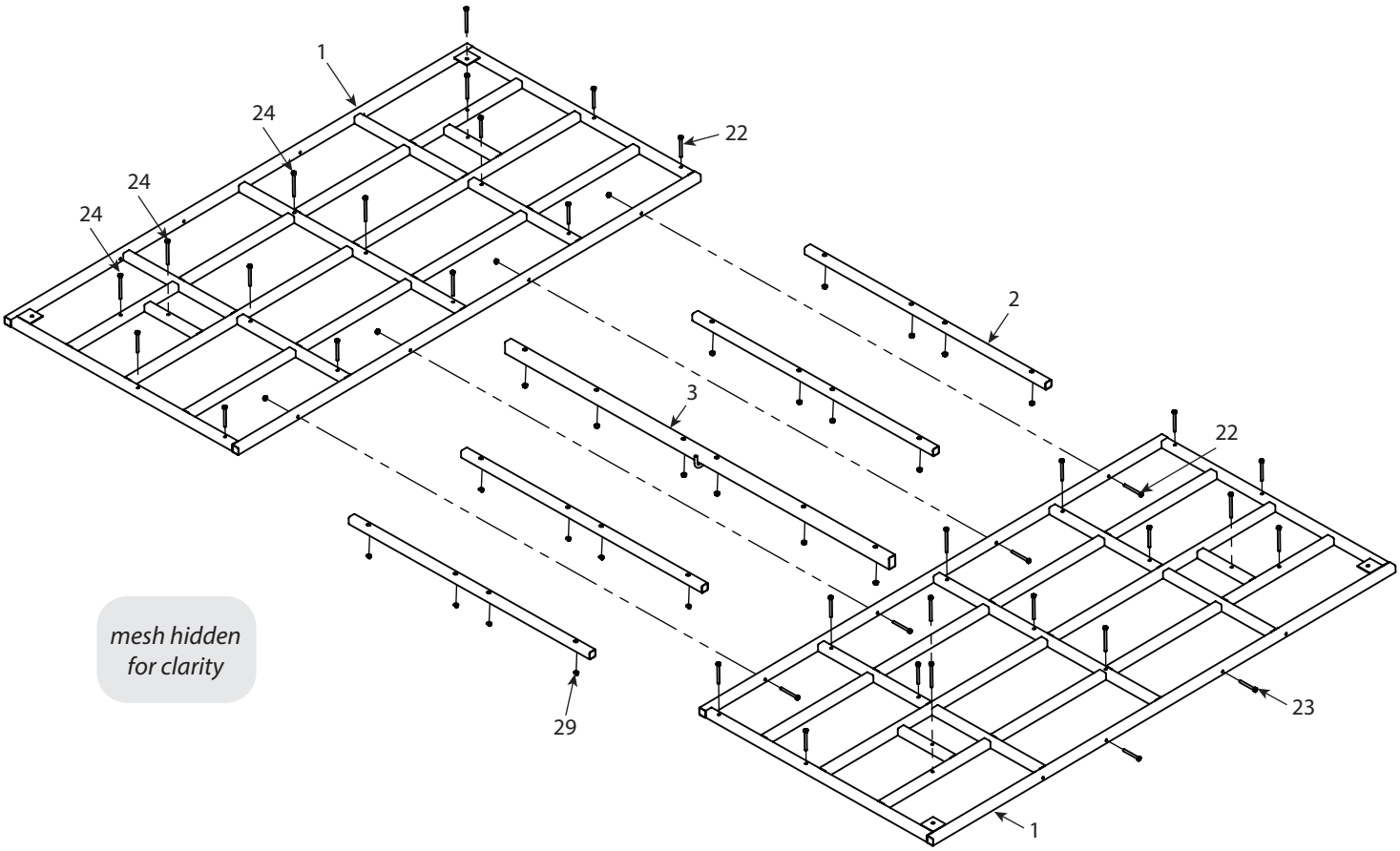

PRODUCT DIAGRAM - TOWER LEGS

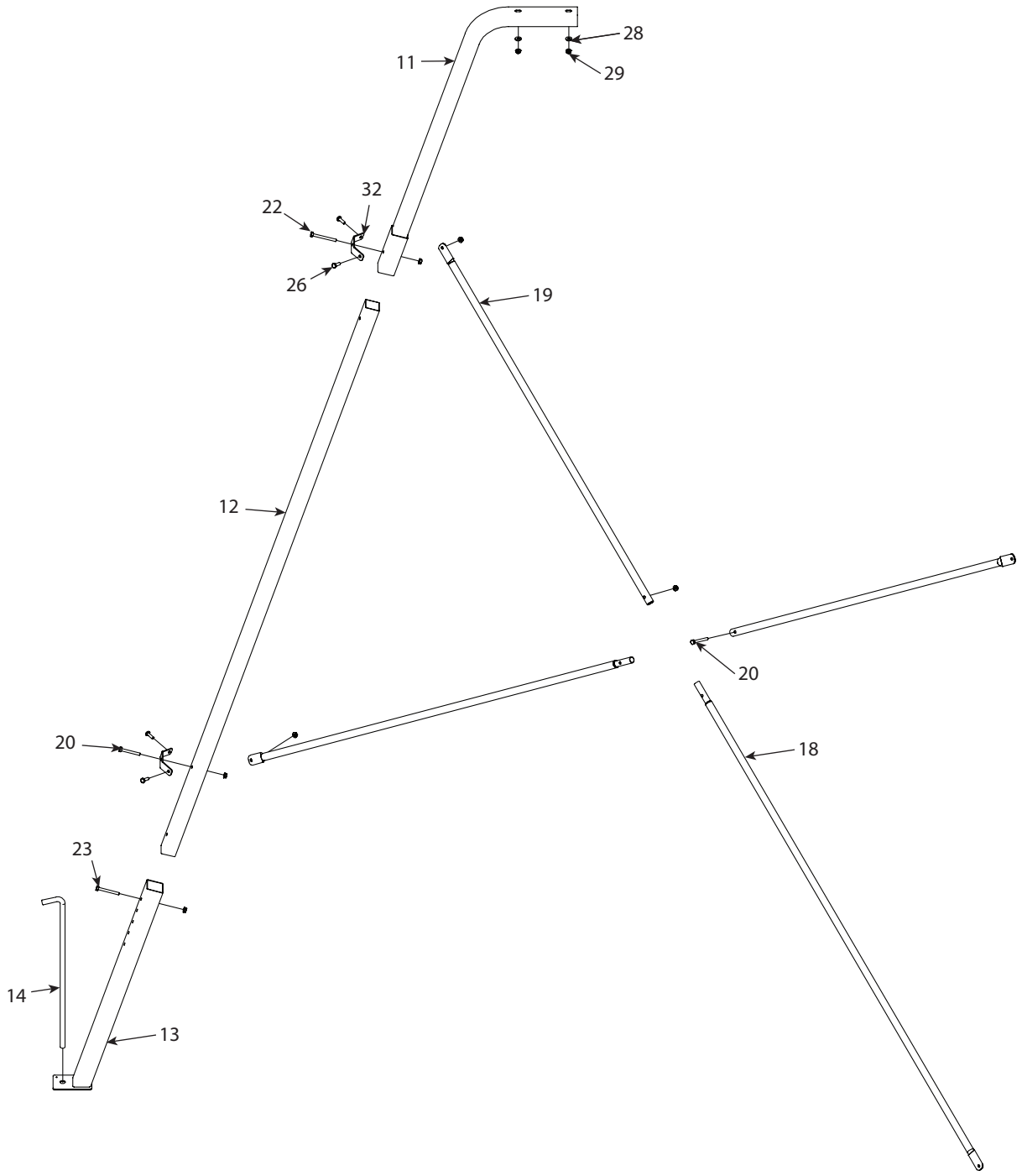

PRODUCT DIAGRAM - LADDER

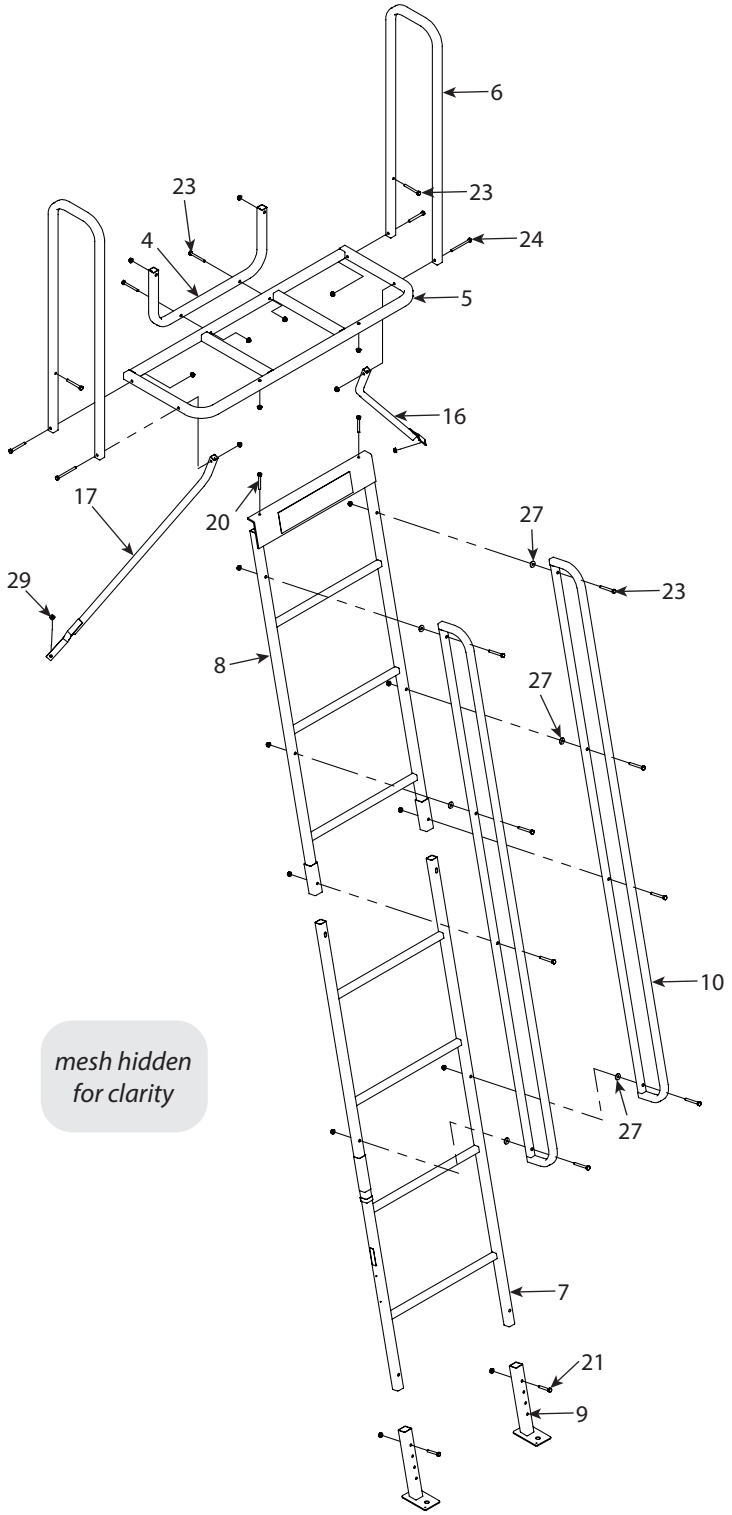

FINISHED TOWER

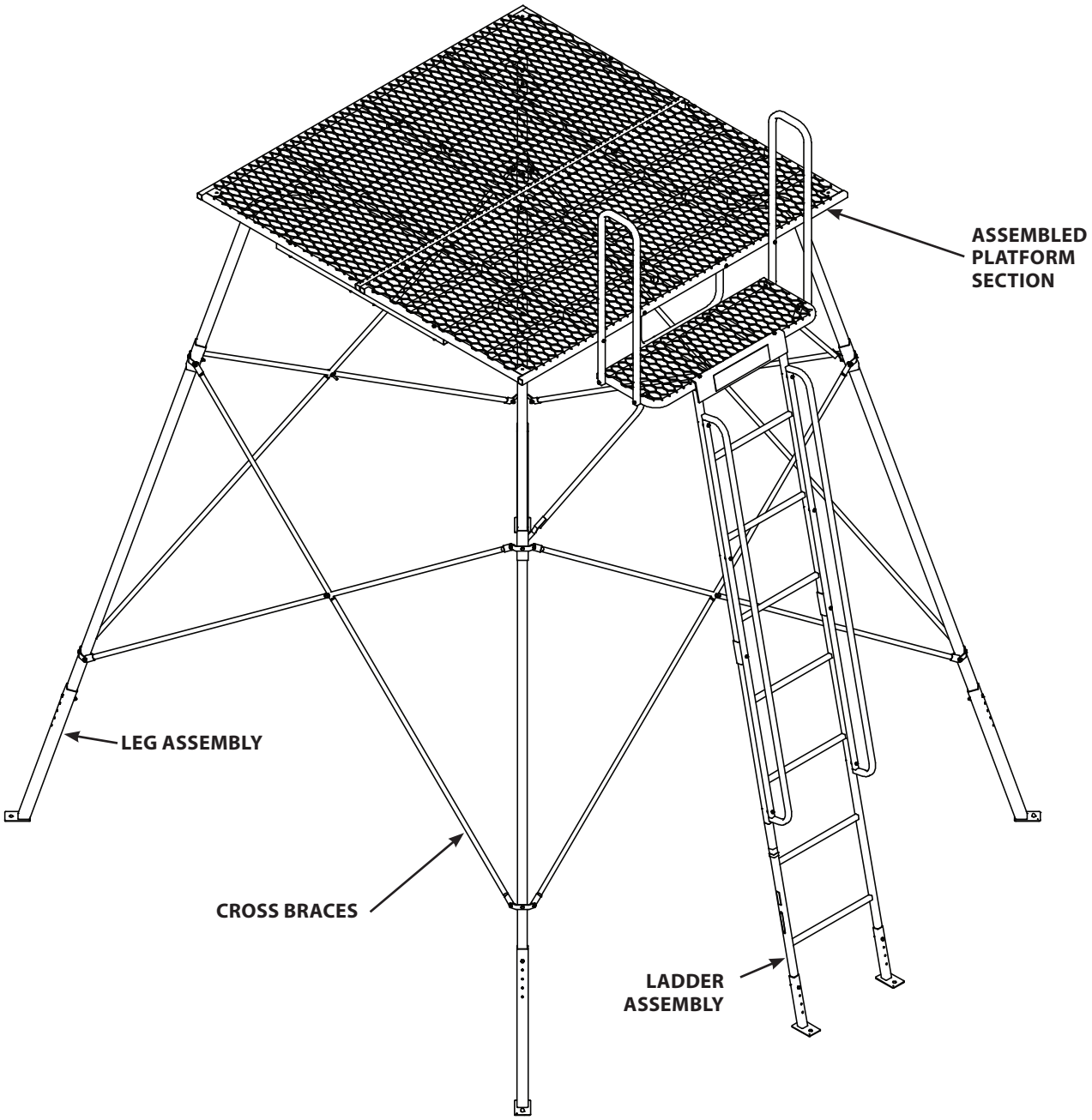

Do not remove labels/warnings from product, they are there for your safety.

Recommended for adult use only.

ASSEMBLY INSTRUCTIONS

Do not tighten any nut and bolt combinations completely until instructions indicate to. Finger tighten plus one turn of a wrench only! This will temporarily hold the locknut on the bolt while helping alignment of all parts!

STEP 1

1. Attach the four short platform braces (2) to one of the platform sections (1) using two 1/4-20 X 2-1/2 IN bolts (22) and 1/4-20 nuts (29) for each brace. **SEE FIGURE 1.**

   Attach the long center platform brace (3) to the platform section (1) using three 1/4-20 X 3 IN bolts (24) and 1/4-20 nuts (29). **SEE FIGURE 1.**

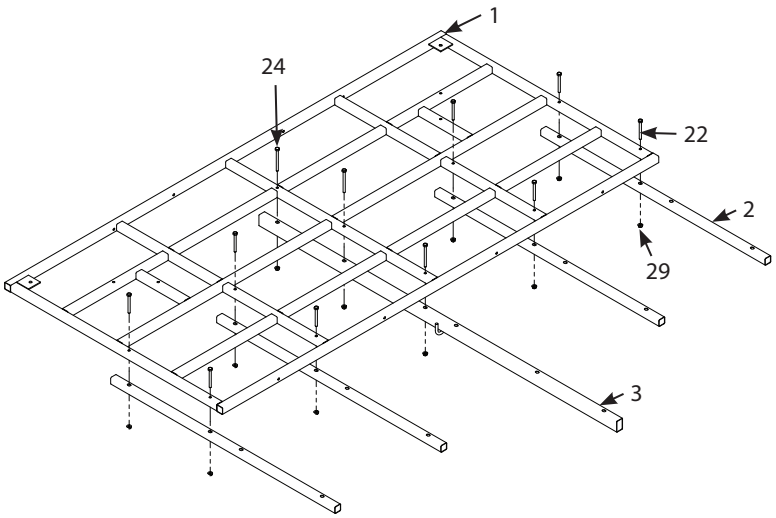

mesh hidden for clarity

FIGURE 1

STEP 2

2. Attach the remaining platform section (1) to the four short platform braces (2) using two 1/4-20 X 2-1/2 IN bolts (22) and 1/4-20 nuts (29) for each brace. **SEE FIGURE 2.**

   Attach the platform section (1) to the long center platform brace (3) using three 1/4-20 X 3 IN bolts (24) and 1/4-20 nuts (29). **SEE FIGURE 2.**

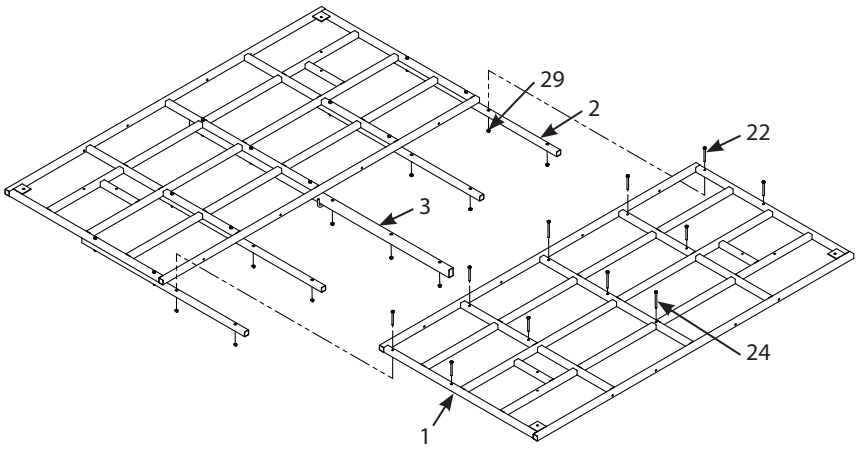

mesh hidden for clarity

FIGURE 2

STEP 3

3. Secure the two platforms (1) together using four 1/4-20 X 2-1/2 IN bolts (22) and 1/4-20 nuts (29). **SEE FIGURE 3.**

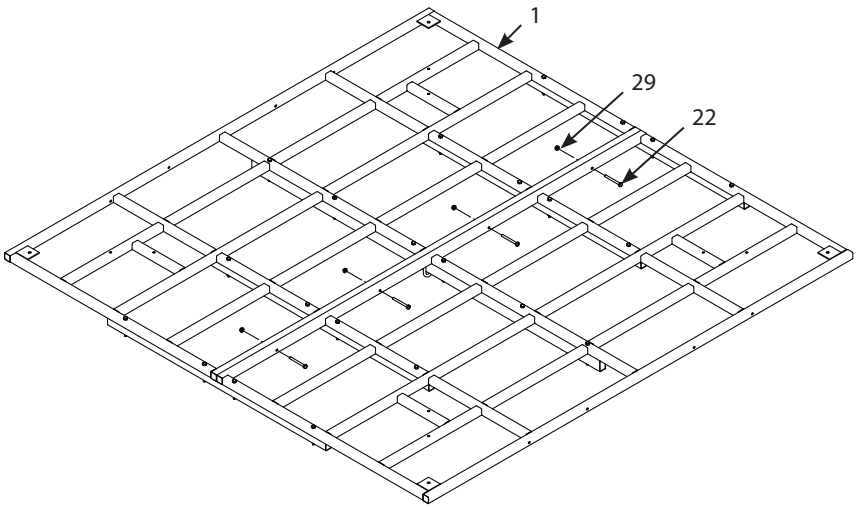

mesh hidden for clarity

FIGURE 3

STEP 4

4. Attach the four leg-to-platform attachment parts (11) to the assembled platform using two 1/4-20 X 3 IN bolts (24), two 1/4 IN steel washers (28) and 1/4-20 nuts (29) for each part. **SEE FIGURE 4.**

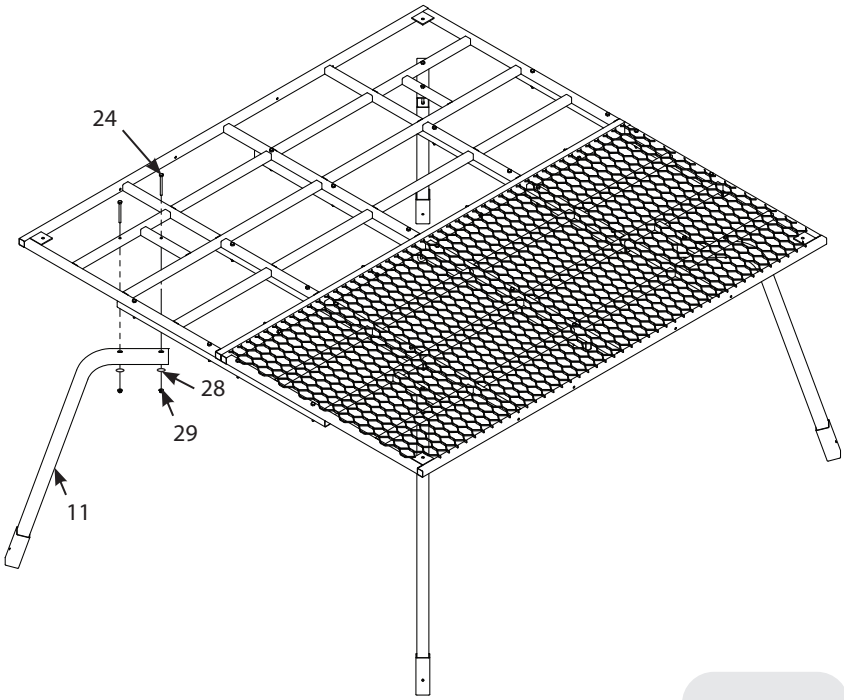

mesh hidden for clarity

FIGURE 4

STEP 5

5. Attach the entry platform brace (4) to one of the platform sections (1) using two 1/4-20 X 2-1/4 IN bolts (23) and 1/4-20 nuts (29). **SEE FIGURE 5.**

   Attach the entry platform (5) to the entry platform brace (4) using two 1/4-20 X 2-1/4 IN bolts (23) and 1/4-20 nuts (29). **SEE FIGURE 5.**

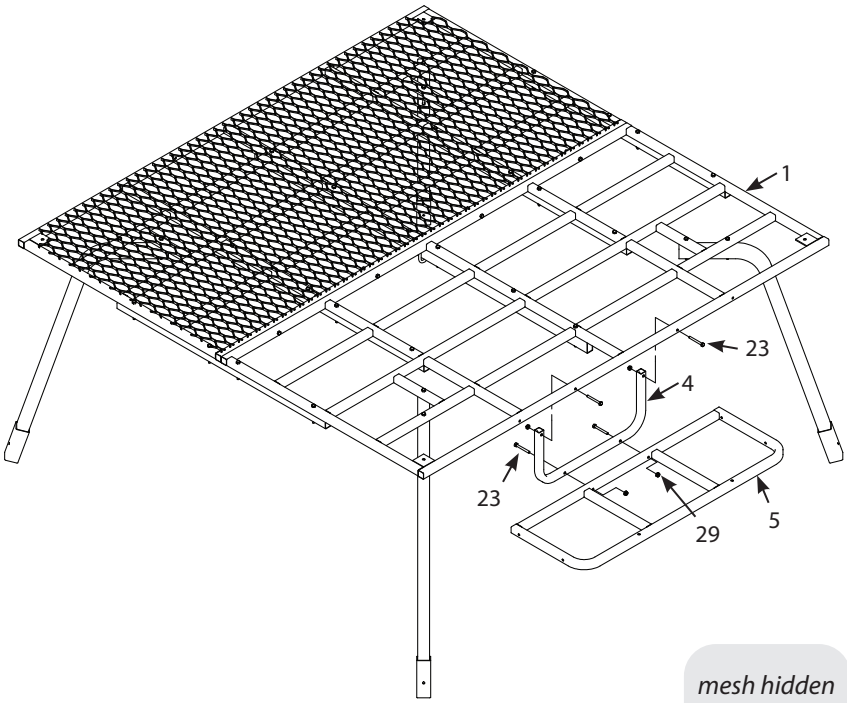

mesh hidden for clarity

FIGURE 5

STEP 6

6. Attach the two entry platform hand rails (6) to the entry platform (5) and platform section (1) using four 1/4-20 X 2-1/4 IN bolts (23) and 1/4-20 nuts (29). **SEE FIGURE 6.**

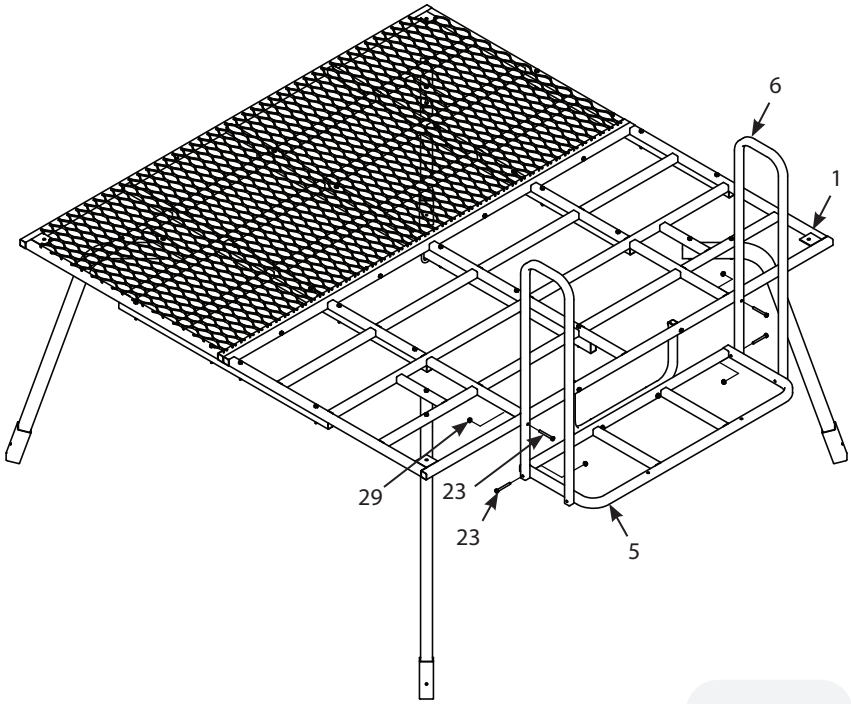

mesh hidden for clarity

FIGURE 6

STEP 7

7. Attach the right and left entry platform braces (16, 17) to the entry platform (5) and entry platform hand rails (6) using two 1/4-20 X 3 IN bolts (24) and 1/4-20 nuts (29). **SEE FIGURE 7**. *Securely tighten all loose hardware at this time.*

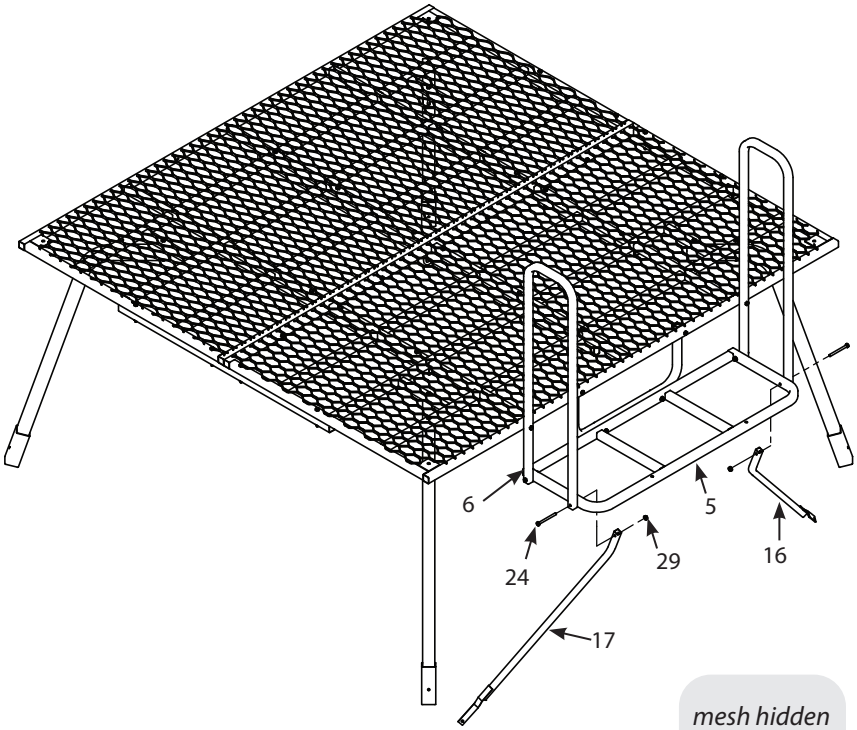

mesh hidden for clarity

FIGURE 7

STEP 8

8. Assemble each of the four legs by attaching an adjustable foot (13) to a leg (12) using a 1/4-20 X 2-1/4 IN bolt (23) and 1/4-20 nut (29). It is easiest to adjust the tower level later if you use the top adjustment hole now as shown. **SEE FIGURE 8.**

   Attach a brace-to-leg attachment bracket (32) to each leg (12) using a 1/4-20 X 2 IN bolt (20) and 1/4-20 nut (29). **SEE FIGURE 8.** *Securely tighten all loose hardware at this time.*

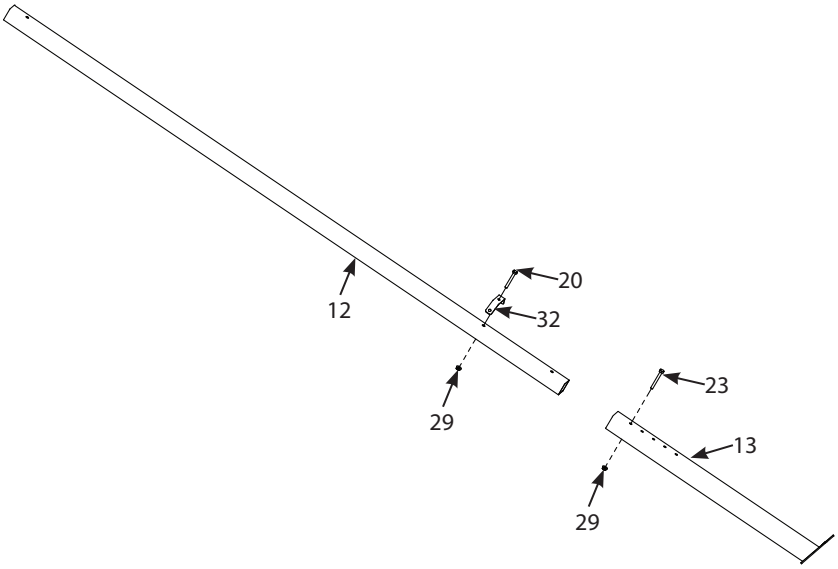

FIGURE 8

STEP 9

9. Start assembly of the cross braces by inserting a male cross brace (18) into each female cross brace (19). **SEE FIGURE 9.**

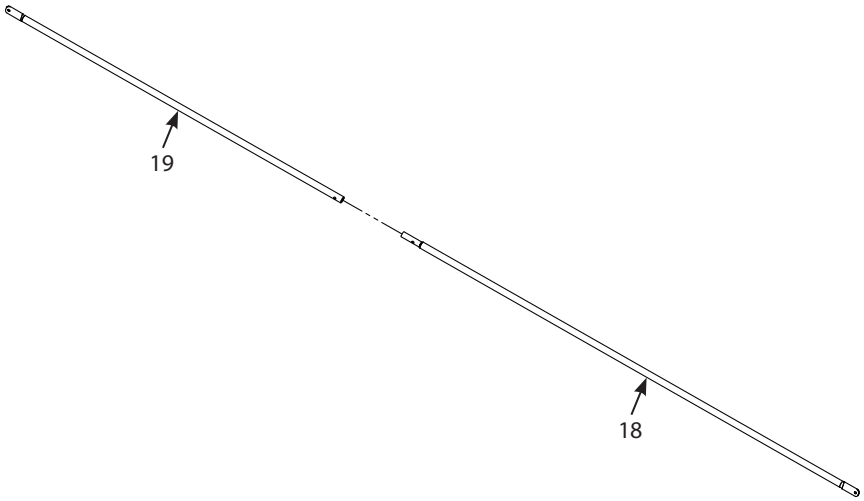

FIGURE 9

STEP 10

10. Complete assembly of the cross braces by attaching two cross brace assemblies together using a 1/4-20 X 2 IN bolt (20) and 1/4-20 nut (29) to make four separate cross brace assemblies. **SEE FIGURE 10.** *Securely tighten all loose hardware at this time.*

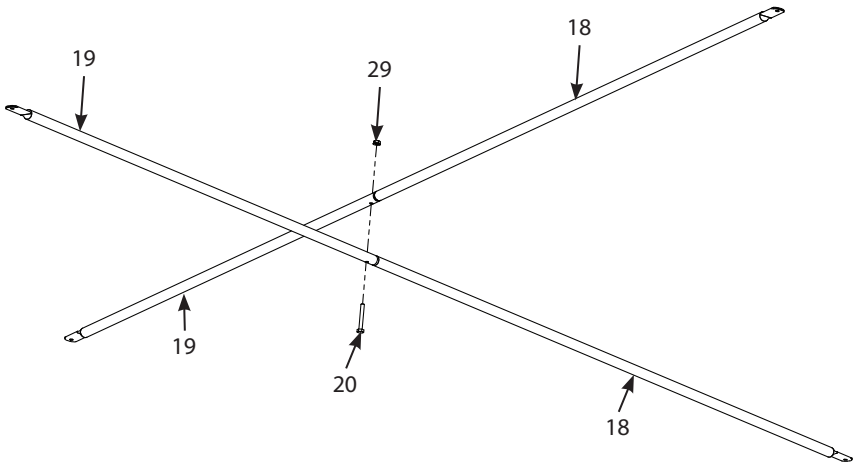

FIGURE 10

STEP 11

11. Begin assembly of the ladder by first sliding together the bottom and top ladder sections (7, 8) as shown. **SEE FIGURE 11.**

    Secure the ladder sections together by attaching the two ladder hand rails (10) to the four holes on each side of the ladder using four 1/4-20 X 2-1/4 IN bolts (23), three orange plastic washers (27) and 1/4-20 nuts (29) for each hand rail. **SEE FIGURE 11.**

    Attach the adjustable ladder feet (9) to the bottom ladder section (7) using a 1/4-20 X 1-3/4 IN bolt (21) and 1/4-20 nut (29) for each foot. It is easiest to adjust the ladder level later if you use the top adjustment hole now as shown. **SEE FIGURE 11.** *Securely tighten all loose hardware at this time.*

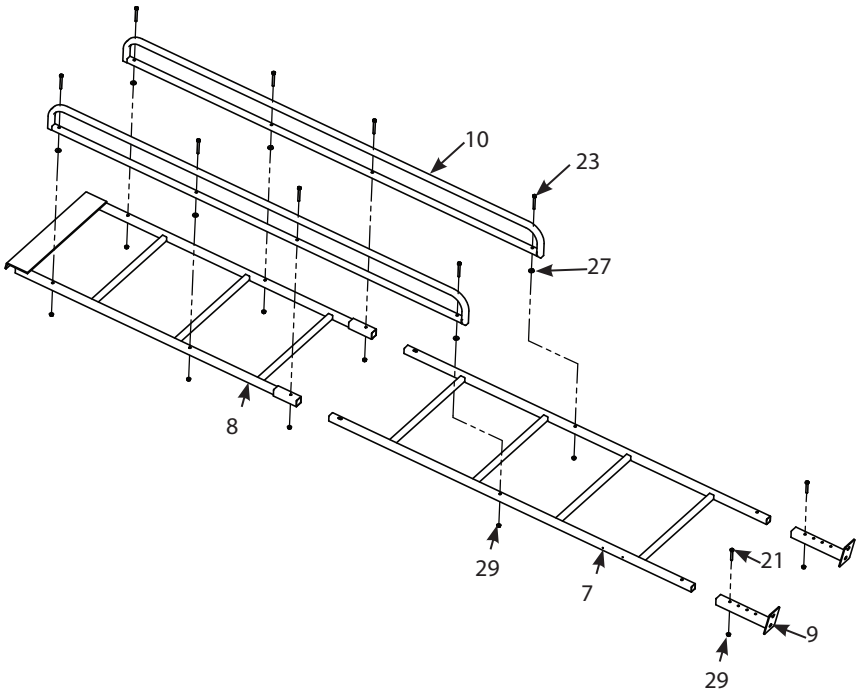

FIGURE 11

STEP 12

12. Tip the platform on edge as shown and insert the four leg assemblies into the leg-to-platform attachment parts (11). Pay attention to the orientation of the leg so that the foot plate is angled correctly to sit flat on the ground. For the two upper legs, attach a brace-to-leg attachment bracket (32) to each leg and secure the parts together using a 1/4-20 X 2-1/2 IN bolt (22) and 1/4-20 nut (29). For the two lower legs, the right and left entry platform braces (16, 17) must also be attached to the bolts in this step. **SEE FIGURE 12.**

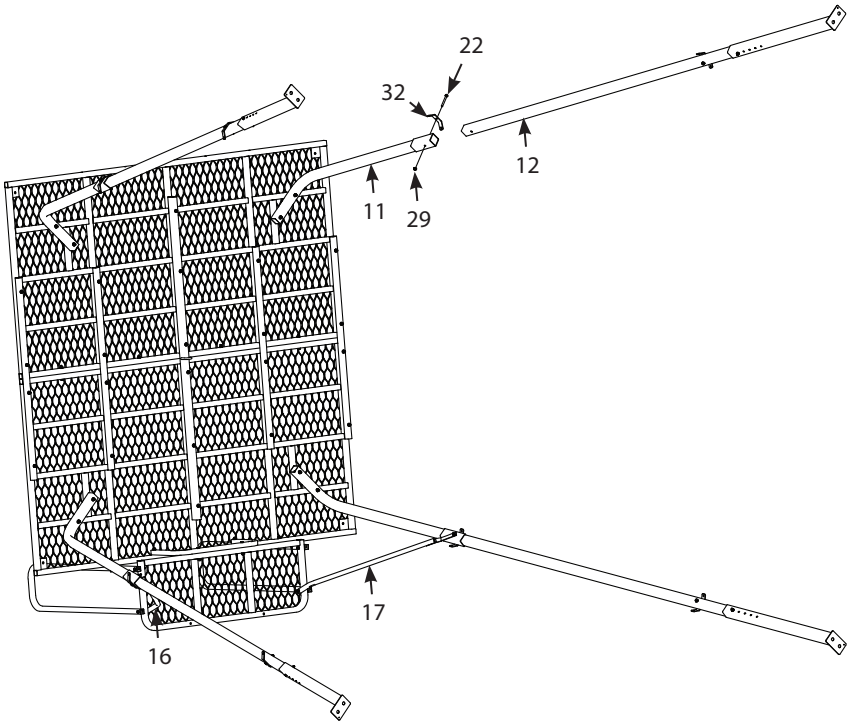

FIGURE 12

STEP 13

13. While paying attention to the orientation of the cross braces, attach the cross brace assemblies to the inside of the brace-to-leg attachment brackets (32) using a 1/4-20 X 3/4 IN bolt (26) and 1/4-20 nut (29) on each end. The female cross braces (19) should be closer to the platform side of the tower as shown. **SEE FIGURE 13A.** *Securely tighten all loose hardware at this time.*

    Attach one end of the cable (31) to the loop in the center platform brace (3) using two cable clamps (30). **SEE FIGURE 13B.**

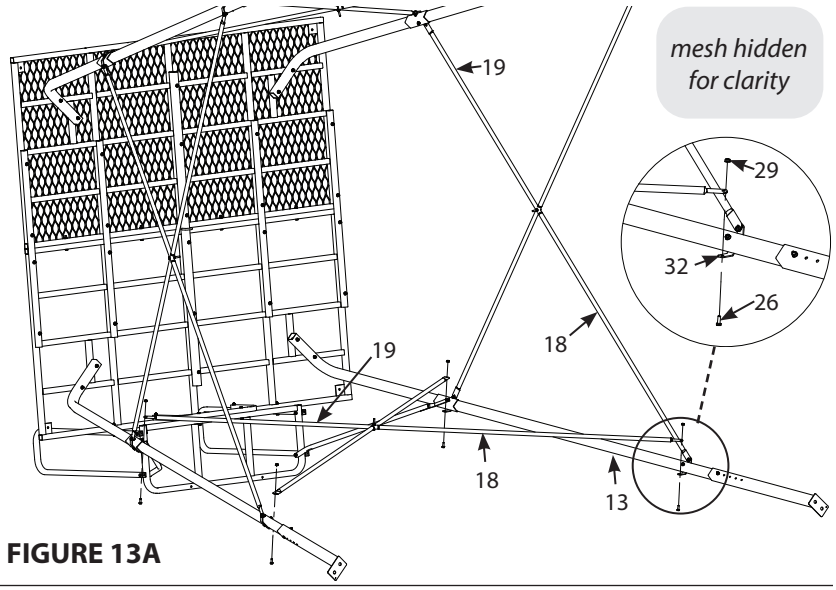

FIGURE 13A

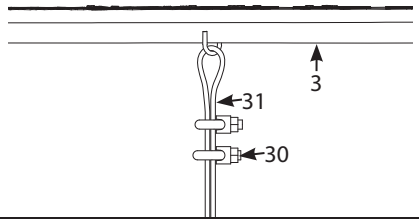

FIGURE 13B

STEP 14

14. While the tower is on its side, it is now time to attach the Game Winner 6' x 6' Hybrid Blind ***(sold separately)*** to the tower. With the help of two other people, carefully tip the blind onto the door side and position it in place on the platform. While two people hold it in place, the third person should bolt the blind and tower together by reaching under the wall panels of the blind and using a 1/4-20 X 1 IN bolt (25), 1/4 IN steel washer (28) and 1/4-20 nut (29) in each corner. **SEE FIGURE 14.** *Securely tighten all loose hardware at this time.*

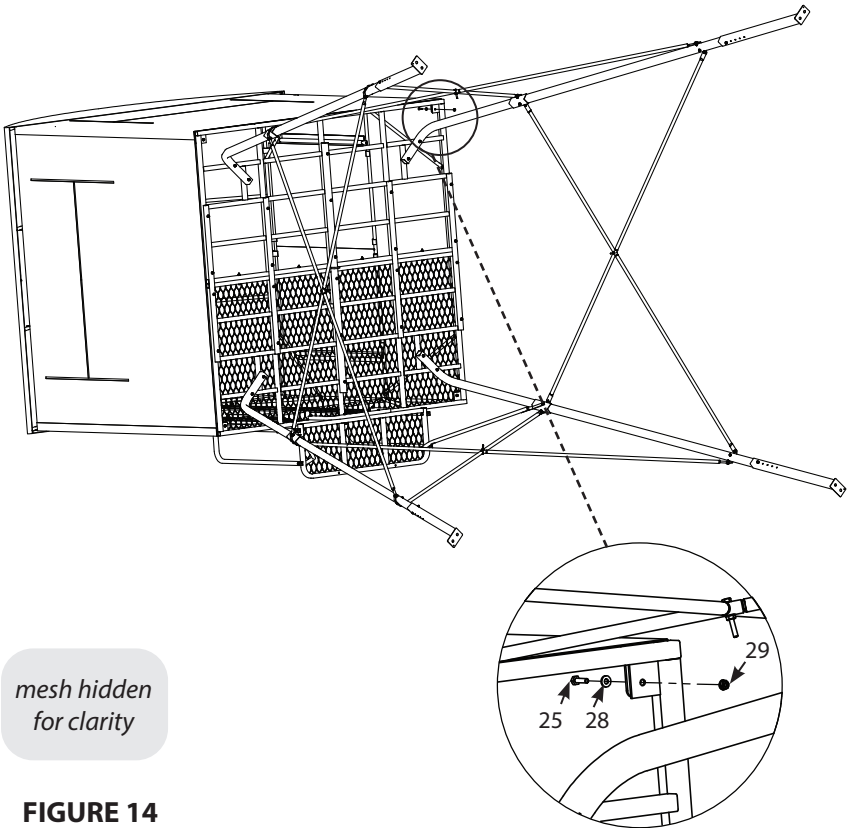

FIGURE 14

STEP 15

15. With ***at least four people***, carefully lift on the platform side of the tower and tilt onto its feet. **DO NOT** lift only on the blind! **SEE FIGURE 15.**

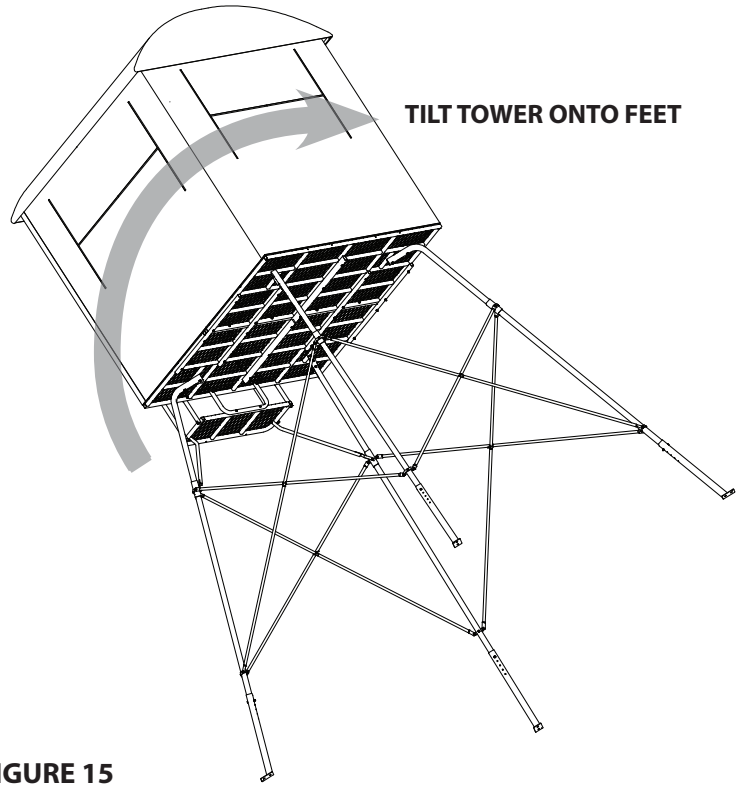

FIGURE 15

STEP 16

16. Using a step ladder, attach the ladder assembly to the entry platform (5) by positioning the attachment plate on the top ladder section (8) on top of the entry platform (5) and by using two 1/4-20 X 2 IN bolts (20) and 1/4-20 nuts (29). **DO NOT** climb the tower's ladder to bolt it to the entry platform! **SEE FIGURE 16.** *Securely tighten all loose hardware at this time.*

    At this time you should level the platform by adjusting the leg and ladder feet.

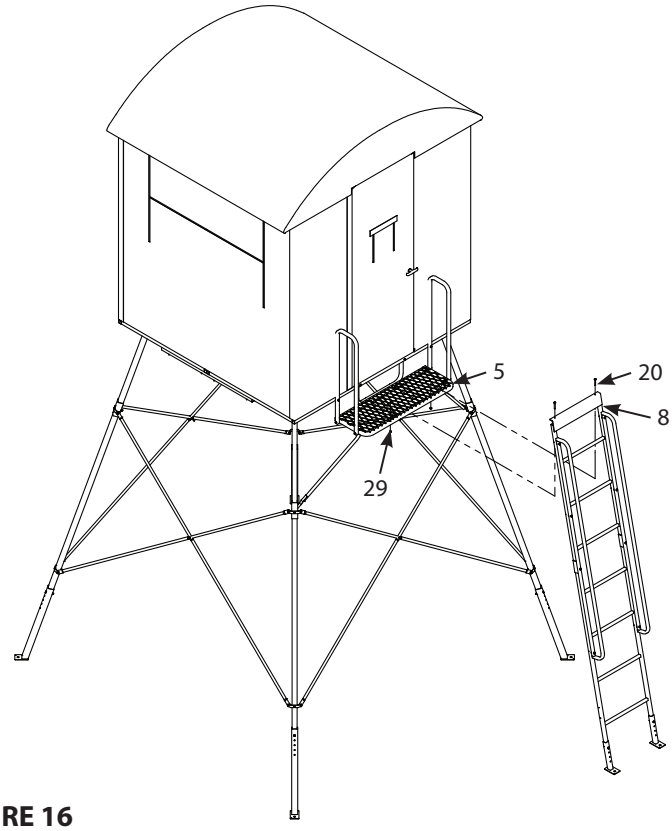

FIGURE 16

STEP 17

17. After the platform has been leveled, to secure the tower to the ground, first start the auger (15) into the ground directly under the center of the platform by using one of the ground stakes (14) as a "T" handle through the loop in the top of the auger to help partially screw it in. Leave approximately 6" of the auger above the ground at this time.

    Attach cable (31) to the auger with two cable clamps (30) as shown. **SEE FIGURE 17.** Screw the auger further into the ground until the cable is pulling down tightly on the platform.

    NOTE: DO NOT over tighten cable, damage or distortion to the platform may occur.

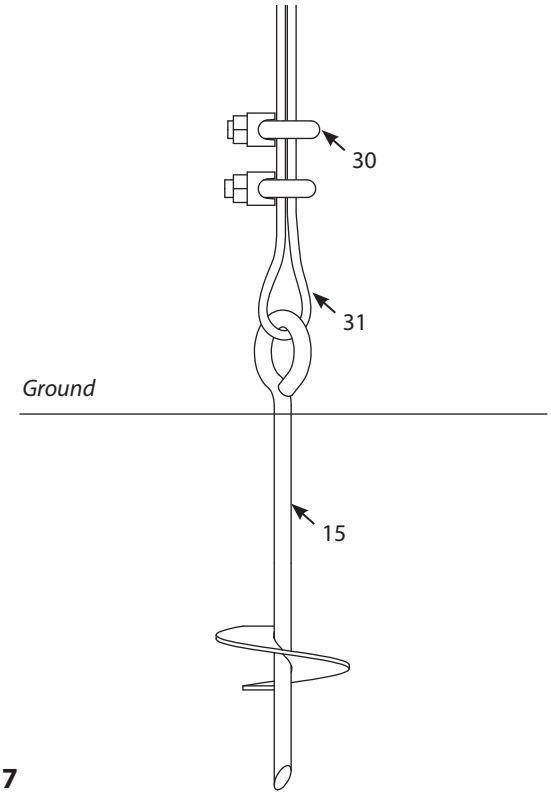

FIGURE 17

STEP 18

18. Using a hammer, drive the four ground stakes (14) through the holes in the tower feet (13). **SEE FIGURE 18.**

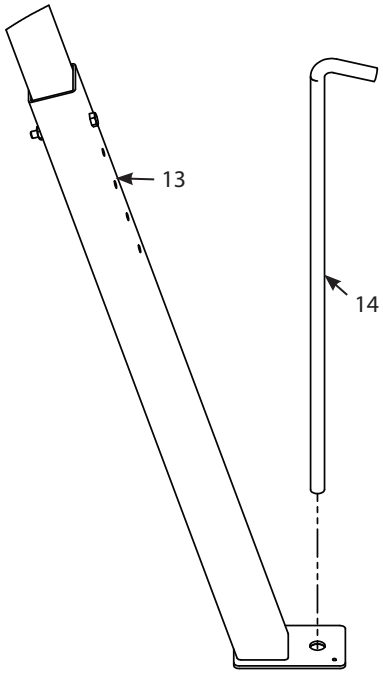

FIGURE 18

INSPECTION AND MAINTENANCE

BEFORE EACH USE PERFORM THE FOLLOWING:

- Inspect all webbing, rope, cord, and strap assemblies for wear or damage.
- Inspect cables and/or cable ends for damage or kinking.
- Inspect all hardware and chain components for damage.
- Inspect for any structural damage to product. (If any exists call customer service.)
- Inspect all nut and bolt assemblies to be certain none are loose.
- Inspect for any missing parts.
- Lubricate all pivot and slide together points with powder graphite, petroleum jelly or silicone spray to prevent noise, wear and rust.
- Inspect entire product for any rust, corrosion, cracks, freezing, excessive heat or rotting damage that may effect the safety of your product. Discard any questionable product.
- Inspect entire product for any structural damage - pay close attention to all weld locations. (Return to factory for repair or discard product if any damage is found.)
- Using correct wrenches inspect all nut & bolt assembly locations and snug up any that may be loose. Be careful not to crush tubing when tightening!
- Inspect and check operation of all cables, cable ends, cord, rope, webbing, and strap or chain assemblies. Replace with factory new any item or assembly that shows signs of wear, damage, kinking, or functions incorrectly.
- Inspect seat. Replace any seat with factory new that shows signs of structural damage or wear.
- Inspect all hardware for wear or damage, also be sure you have no missing parts.
- Never modify your stand in any way by making repairs, replacing parts, or altering adding or attaching anything to it except if explicitly authorized in writing by the manufacturer.

GAME WINNER™

*All weights, specifications and features are approximate and are subject to change without notice. Due to continuous product improvements, product images may not be exact. Warning labels in some product images may have been removed for photography purposes only. Props shown in photos not included. Some assembly may be required.